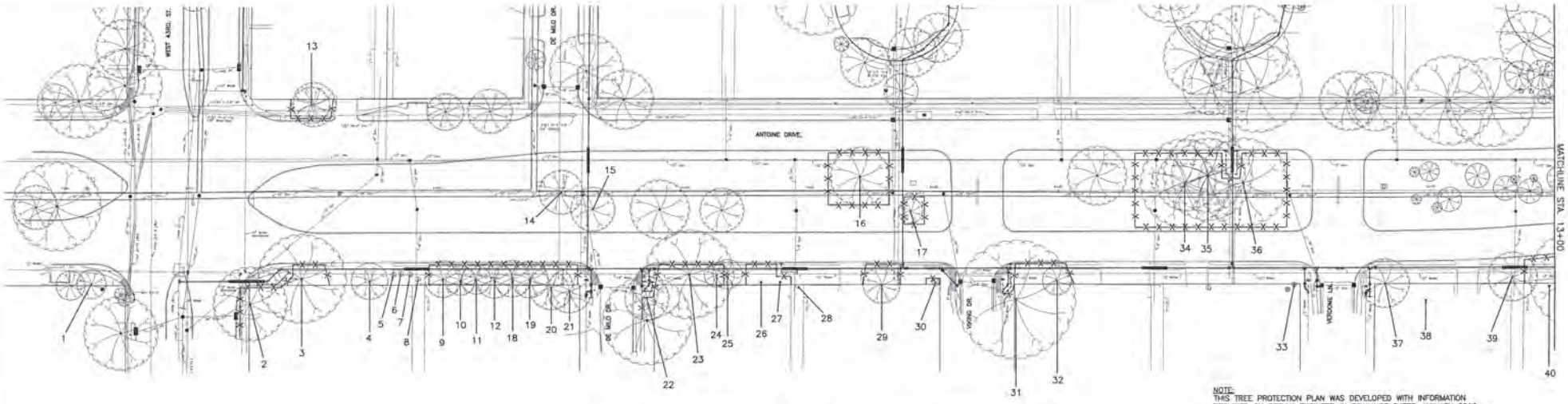

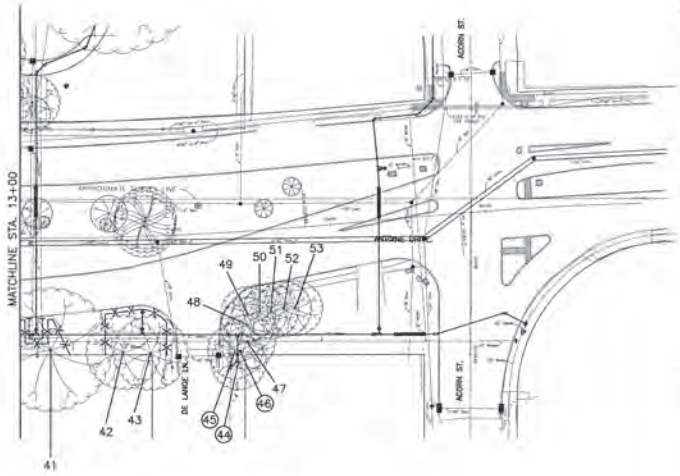

TREE PRESERVATION PLAN LEGEND

- TREE NUMBER/LOCATION
- ① TREE TO BE REMOVED
- -X-X- TREE PROTECTION FENCE
- ROOT PRUNING TRENCH
- ⊙ REPLACEMENT PLANTING SPECIES AND SIZE/TYPE

Tree No. Location	Description	Comments	Treatment
Trees on Antoine Drive			
1 5425 Antoine	12" Cedar	Not ordinance tree	
2 5430 W43rd	24" Live Oak	Ordinance tree	Root prune for walkedine, Fence
3 5430 W43rd	27" Sweetgum	Ordinance tree	Fence, Bore waterline
4 5430 W43rd	6" Oleander	Not ordinance tree	
5 5430 W43rd	10" Oleander	Not ordinance tree	
6 5430 W43rd	10" Oleander	Not ordinance tree	
7 5430 W43rd	10" Oleander	Not ordinance tree	
8 5429 De Milo	10" Oleander	Not ordinance tree	
9 5429 De Milo	13" Live Oak	Ordinance tree	Fence, Bore waterline
10 5429 De Milo	7" Live Oak	Ordinance tree	Fence, Bore waterlinn
11 5429 De Milo	12" Live Oak	Ordinance tree	Fence, Bore waterlinn
12 5429 De Milo	12" Live Oak	Ordinance tree	Fence, Bore waterlinn
13 5502 Antoine	12" Live Oak	Ordinance tree	Fence
14 Esplanade	10" Photinia	Not ordinance tree	
15 Esplanade	15" Mulberry	Not ordinance tree	
16 Esplanade	16" Live Oak	Ordinance tree	Fence
17 Esplanade	6" Pine	Ordinance tree	Fence
18 5429 De Milo	14" Live Oak	Ordinance tree	Fence, Bore waterline
19 5429 De Milo	12" Live Oak	Ordinance tree	Fence, Bore waterline
20 5429 De Milo	15" Live Oak	Ordinance tree	Fence, Bore waterline
21 5429 De Milo	12" Live Oak	Ordinance tree	Fence, Bore waterline
22 5430 De Milo	8" Pine	Ordinance tree	Root prune for bend, Fence, Bore waterline
23 5430 De Milo	32" Water Oak	Ordinance tree	Fence, Bore waterline
24 5430 De Milo	6" Magnolia	Ordinance tree	Fence, Bore waterline
25 5430 De Milo	8" Tallow	Not ordinance tree	
26 5430 De Milo	15" Pecan	Ordinance tree	Fence, Bore waterline
27 5430 De Milo	12" Pecan	Ordinance tree	Root prune for bend, Fence, Bore waterline
28 5429 Viking	15" Sugarberry	Private tree, will not be impacted	
29 5429 Viking	22" Pecan	30% dieback, Private	Fence, Bore waterline
30 5429 Viking	2" Live Oak	Ordinance tree	Fence
31 5430 Viking	29" Water Oak	Trunk suckering; Private, Not best condition	Root prune for bend, Fence, Bore waterline
32 5430 Viking	7" Pecan	Ordinance tree	Fence, Bore waterline
33 5429 Verdome	6" Oleander	Private tree, will not be impacted	
34 Esplanade	20" Arizona Ash	30% dieback, Ordinance tree	Fence
35 Esplanade	31" Live Oak	Ordinance tree	Root prune for bend, Fence, Bore waterline
36 Esplanade	36" Arizona Ash	Ordinance tree	Root prune for bend, Fence, Bore waterline
37 5430 Verdome	6" Oleander	Not ordinance tree	
38 5430 Verdome	20" Tallow	Private tree, will not be impacted	
39 5430 Verdome	10" Fig	Not ordinance tree	
40 5429 De Lange	10" Loquat	Private tree, will not be impacted	
41 5429 De Lange	28" Arizona Ash	Ordinance tree	Root prune for tree, Fence, Bore waterline
42 5429 De Lange	24" Pecan	Ordinance tree	Hand dig for fire hydrant, Fence, Bore waterline
43 5429 De Lange	17" Pecan	Ordinance tree	Fence, Bore waterline
44 5430 De Lange	4" Crepe Myrtle	Not ordinance tree, remove for bends	Remove tree, no replacement required
45 5430 De Lange	4" Crepe Myrtle	Not ordinance tree, remove for bends	Remove tree, no replacement required
46 5430 De Lange	5" Crepe Myrtle	Not ordinance tree, remove for bends	Remove tree, no replacement required
47 5430 De Lange	12" Crepe Myrtle	Not ordinance tree	
48 5430 De Lange	7" Crepe Myrtle	Not ordinance tree	
49 5430 De Lange	5" Crepe Myrtle	Not ordinance tree	
50 5430 De Lange	5" Crepe Myrtle	Not ordinance tree	
51 5430 De Lange	4" Crepe Myrtle	Not ordinance tree	
52 5430 De Lange	5" Crepe Myrtle	Not ordinance tree	
53 5430 De Lange	2" Crepe Myrtle	Not ordinance tree	

NOTE:
THIS TREE PROTECTION PLAN WAS DEVELOPED WITH INFORMATION PROVIDED BY DESIGN ENGINEER IN DRAWINGS DATED JANUARY 2013. THE PLAN CONSIDERS ALL FITTINGS, VERTICAL OFFSETS AND AREAS OF NECESSARY EXCAVATION. CHANGES MADE TO DESIGN MAY COMPROMISE THE TREE PROTECTION PLAN. REFER TO SPECIFICATIONS 01562 AND 02915. CONDITION OF EACH TREE IS BASED ON VISUAL EVALUATION AT TIME OF DESIGN. CONDITION AND STRUCTURAL INTEGRITY OF EACH TREE IS NOT GUARANTEED BY DESIGNER AT ANY POINT IN THE FUTURE, AS ENVIRONMENTAL AND MAINTENANCE INFLUENCES ON EACH TREE CAN NOT BE DETERMINED BY DESIGNER.

0 20 40 80

S&B INFRASTRUCTURE, LTD.
Houston Texas PE Firm Registration Number F-1582
DESIGN ENGINEER NAME:
ADDRESS:
TELEPHONE: 713-845-5401
TX FIRM NUMBER: F-1582
SURVEYED BY: UNITED ENG. INC.
FB No. P-5673
C.N. Koehl
Urban Forestry, Inc.
210 Stone Bush Ct. • Katy, Texas 77493
281-391-0022 ckoehl@koehlurbanforestry.com

APPROVED: Chris A. Koehl 01-21-2013

CITY OF HOUSTON
DEPARTMENT OF PUBLIC WORKS AND ENGINEERING

WATER LINE REPLACEMENT
IN FOREST PINES AREA

TREE PROTECTION PLAN
SHEET 1 OF 16

WBS NUMBER
S-000035-0130-4

DRAWING SCALE
1"=40'

CITY OF HOUSTON PM
JOHN MSIGWA, P.E.

SHEET NO. 118 OF 143

50281

DATE: Jan 21, 2013-2:51pm USERNAME: mwb FILENAME: 118-38 Forest Pines TP-1.dwg

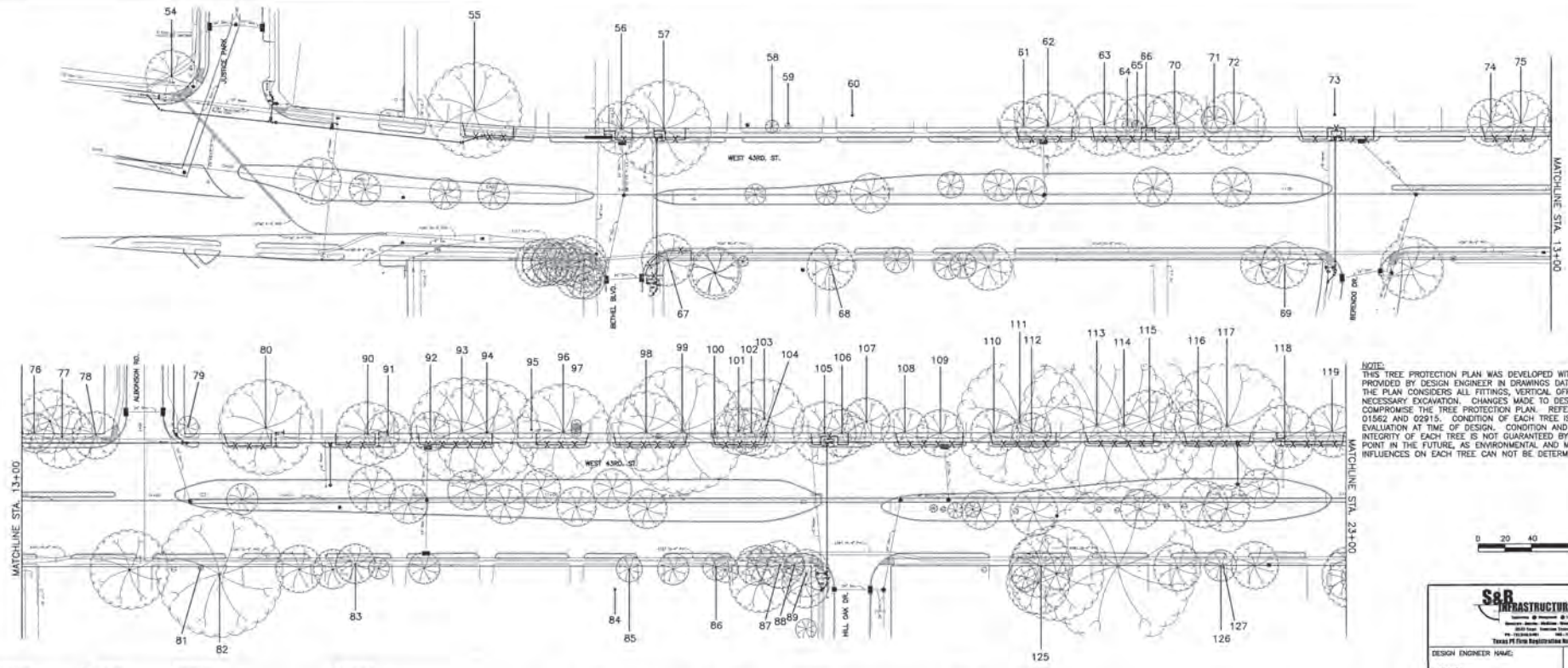

NOTE:
THIS TREE PROTECTION PLAN WAS DEVELOPED WITH INFORMATION PROVIDED BY DESIGN ENGINEER IN DRAWINGS DATED JANUARY 2013. THE PLAN CONSIDERS ALL FITTINGS, VERTICAL OFFSETS AND AREAS OF NECESSARY EXCAVATION. CHANGES MADE TO DESIGN MAY COMPROMISE THE TREE PROTECTION PLAN. REFER TO SPECIFICATIONS 01562 AND 02915. CONDITION OF EACH TREE IS BASED ON VISUAL EVALUATION AT TIME OF DESIGN. CONDITION AND STRUCTURAL INTEGRITY OF EACH TREE IS NOT GUARANTEED BY DESIGNER AT ANY POINT IN THE FUTURE, AS ENVIRONMENTAL AND MAINTENANCE INFLUENCES ON EACH TREE CAN NOT BE DETERMINED BY DESIGNER.

0 20 40 80

Tree No. Location	Description	Comments	Treatment
Trees on West 43rd Street			
54 Not available	18" Mimosa	Not ordinance tree	
55 6214 W 43rd	24" Water Oak	Private tree	Fence, Bore waterline
56 6206 W 43rd	18" Live Oak	Private tree	Root prune for bend, Fence, Bore waterline
57 6206 W 43rd	36" Live Oak	Slime flux, Split in trunk, Private tree	Root prune for tee, Fence, Bore waterline
58 6202 W 43rd	3' Yucca	Private tree, will not be impacted	
59 6114 W 43rd	3" Bougainvillea	Private tree, will not be impacted	
60 6114 W 43rd	25" Water Oak	Private tree, will not be impacted	
61 6108 W 43rd	15" Live Oak	Private tree	Fence, Bore waterline
62 6108 W 43rd	18" Live Oak	Private tree	Fence, Bore waterline
63 6102 W 43rd	20" Live Oak	Private tree	Fence, Bore waterline
64 6102 W 43rd	2" Crepe Myrtle	Private tree, will not be impacted	
65 6102 W 43rd	2" Crepe Myrtle	Private tree, will not be impacted	
66 6102 W 43rd	20" Crepe Myrtle	Private tree	Root prune for tap & lead, Fence, Bore waterline
67 4278 Bethel	15" Pine	Ordinance tree	Root prune for fire hydrant, Fence, Bore waterline
68 6115 W 43rd	18" Arborvitae	Private tree, will not be impacted	
69 6002 Berendo	22" Live Oak	Private tree, will not be impacted	
70 6018 W 43rd	16" Tallow	Private tree, will not be impacted	
71 6018 W 43rd	8" Baldcypress	Private tree, will not be impacted	
72 6018 W 43rd	20" Chinaberry	50% topped, Private, will not be impacted	
73 6014 W 43rd	45" Water Oak	Private tree	Root prune for tee, Fence, Bore waterline
74 6006 W 43rd	17" Live Oak	Private tree	Fence, Bore waterline
75 6006 W 43rd	20" Live Oak	Private tree	Fence, Bore waterline
76 6002 W 43rd	10" Crepe Myrtle	Private tree, will not be impacted	
77 6002 W 43rd	18" Chinaberry	Not ordinance tree	
78 6002 W 43rd	10" Crepe Myrtle	Not ordinance tree	
79 5910 W 43rd	4" Japanese Magnolia	Private tree, will not be impacted	
80 5910 W 43rd	25" Arizona Ash	Private tree	Root prune for tap & lead, Fence, Bore waterline
81 5915 W 43rd	5" Crepe Myrtle	Private tree, will not be impacted	
82 5911 W 43rd	26" Arizona Ash	Private tree, will not be impacted	
83 5907 W 43rd	10" Magnolia	Ordinance tree	Hand dig lead
84 5811 W 43rd	23" Arizona Ash	Topped, Private, will not be impacted	
85 5807 W 43rd	3" Crepe Myrtle	Private tree, will not be impacted	

Tree No. Location	Description	Comments	Treatment
Trees on West 43rd Street			
86 5803 W 43rd	8" Crepe Myrtle	Private tree, will not be impacted	
87 5803 W 43rd	15" Crepe Myrtle	Not ordinance tree	
88 5803 W 43rd	10" Crepe Myrtle	Not ordinance tree	
89 5803 W 43rd	27" Crepe Myrtle	Private tree	Root prune for waterline
90 5906 W 43rd	18" Live Oak	Ordinance tree	Root prune for tap & lead, Fence, Bore waterline
91 5902 W 43rd	12" Crepe Myrtle	Not ordinance tree	
92 5902 W 43rd	12" Crepe Myrtle	Private tree, will not be impacted	
93 5902 W 43rd	33" Arizona Ash	Private tree	Fence, Bore waterline
94 5814 W 43rd	31" Arizona Ash	Cavity, Private tree	Fence, Bore waterline
95 5814 W 43rd	2" Crepe Myrtle	Private tree, will not be impacted	
96 5814 W 43rd	30" Arizona Ash	Cavity, Private tree	Fence, Bore waterline
97 5810 W 43rd	2" Crepe Myrtle	Private tree, will not be impacted	
98 5810 W 43rd	30" Arizona Ash	Private tree	Fence, Bore waterline
99 5806 W 43rd	35" Water Oak	Private tree	Fence, Bore waterline
100 5806 W 43rd	1" Sago	Not ordinance tree	
101 5806 W 43rd	15" Live Oak	Private tree	Fence, Bore waterline
102 5806 W 43rd	14" Live Oak	Private tree	Fence, Bore waterline
103 5806 W 43rd	24" Pecan	Private tree	Fence, Bore waterline
104 5806 W 43rd	1" Sago	Not ordinance tree	
105 5802 W 43rd	16" Live Oak	Private tree	Root prune for tee, Fence, Bore waterline
106 5802 W 43rd	16" Tallow	Not ordinance tree	
107 5722 W 43rd	16" Tallow	Private tree, will not be impacted	
108 5722 W 43rd	17" Live Oak	Ordinance tree	Fence, Bore waterline
109 5722 W 43rd	15" Live Oak	Ordinance tree	Fence, Bore waterline
110 5718 W 43rd	17" Live Oak	Ordinance tree	Fence, Bore waterline
111 5718 W 43rd	36" Arizona Ash	Private tree	Fence, Bore waterline
112 5718 W 43rd	12" Live Oak	Ordinance tree	Hand dig tap & lead, Fence, Bore waterline
113 5714 W 43rd	8" Cedar Elm	Private tree, will not be impacted	
114 5714 W 43rd	36" Arizona Ash	50% topped, Private	Fence, Bore waterline
115 5710 W 43rd	16" Magnolia	40% dieback, Private tree	Fence, Bore waterline
116 5710 W 43rd	12" Magnolia	30% dieback, Private	Fence, Bore waterline
117 5710 W 43rd	34" Arizona Ash	Private tree	Fence, Bore waterline
118 5702 W 43rd	22" Live Oak	Ordinance tree	Root prune for tee, Fence, Bore waterline
119 5702 W 43rd	18" Live Oak	Private tree	Fence, Bore waterline
125 5719 W 43rd	20" Live Oak	Ordinance tree	Hand dig lead
126 5707 W 43rd	2" Pear	Not ordinance tree	
127 5707 W 43rd	2" Crepe Myrtle	Not ordinance tree	

TREE PRESERVATION PLAN LEGEND

- TREE NUMBER/LOCATION
- TREE TO BE REMOVED
- TREE PROTECTION FENCE
- ROOT PRUNING TRENCH
- REPLACEMENT PLANTING SPECIES AND SIZE/TYPE

S&B INFRASTRUCTURE LTD.
Texas PE Firm Registration Number: F-1582
DESIGN ENGINEER NAME:
ADDRESS:
TELEPHONE: 713-845-5401
TX FIRM NUMBER: F-1582
SURVEYED BY: UNITED ENG. INC.
FB No. P-5673
C.N. Koehl
Urban Forestry, Inc
210 Stone Bush Ct. • Katy, Texas 77493
281-391-0027 ckoehl@koehlurbanforestry.com

APPROVED: Craig N Koehl 01-21-2013

CITY OF HOUSTON
DEPARTMENT OF PUBLIC WORKS AND ENGINEERING

WATER LINE REPLACEMENT
IN FOREST PINES AREA

TREE PROTECTION PLAN
SHEET 2 OF 16

WBS NUMBER
S-000035-0130-4

DRAWING SCALE
1"=40'

CITY OF HOUSTON PM
JOHN MSIGWA, P.E.

SHEET NO. 119 OF 143

50281

DATE: Jan 21, 2013-2:51pm USERNAME: mwb FILENAME: 119-SB Forest Pines TP-2.dwg

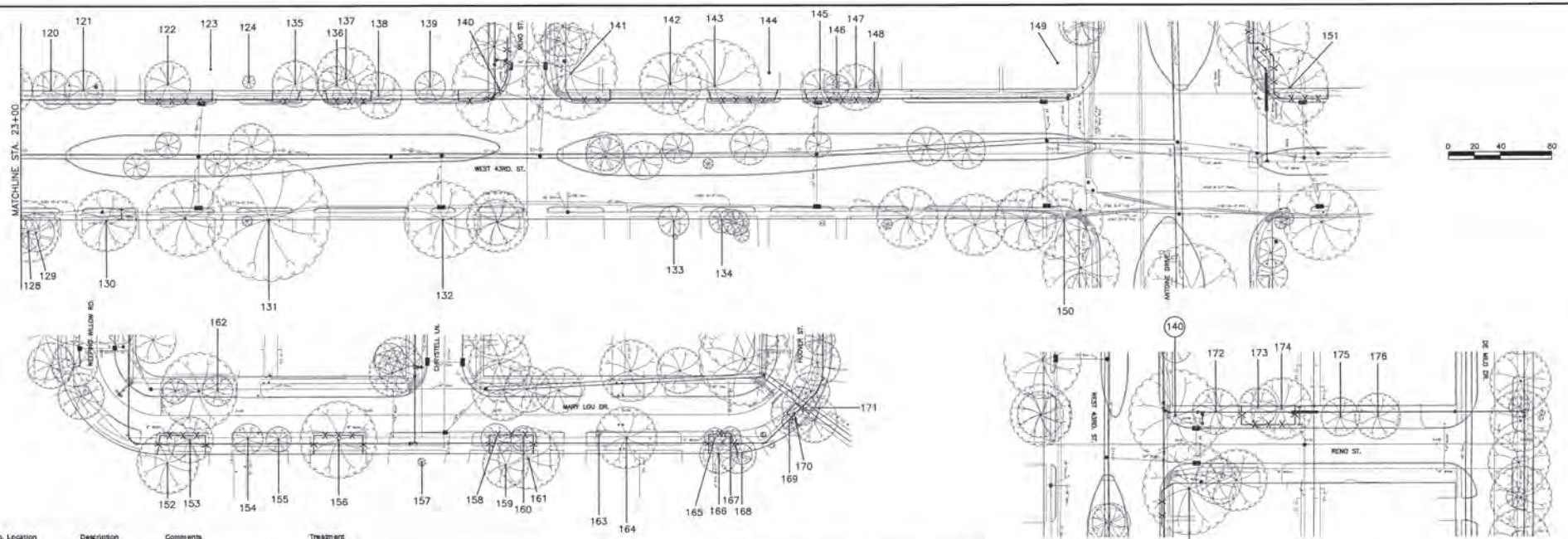

Tree No. Location	Description	Comments	Treatment
Trees on West 43rd Street			
120 5622 W 43rd	16" Crepe Myrtle	Private tree, will not be impacted	
121 5622 W 43rd	9" Crepe Myrtle	Private tree, will not be impacted	
122 5618 W 43rd	14" Pecan	Private tree	Fence, Bore waterline
123 5614 W 43rd	35" Water Oak	20% dieback, Private	Fence, Bore waterline
124 5614 W 43rd	2" Italian Cypress	Private tree, will not be impacted	
125 5719 W 43rd	20" Live Oak	Ordinance tree	Hand dig lead
126 5707 W 43rd	2" Pear	Not ordinance tree	
127 5707 W 43rd	2" Crepe Myrtle	Not ordinance tree	
128 5703 W 43rd	7" Juniper	Private tree, will not be impacted	
129 5703 W 43rd	12' Palm	Private tree, will not be impacted	
130 5623 W 43rd	22" Tallow	Private tree	Root prune for lead
131 5615 W 43rd	33" Arizona Ash	Ordinance tree	Hand dig lead
132 5603 W 43rd	25" Arizona Ash	Ordinance tree	Hand dig lead
133 5519 W 43rd	10" Crepe Myrtle	Private tree, will not be impacted	
134 5519 W 43rd	5" Crepe Myrtle	Private tree, will not be impacted	
135 5610 W 43rd	20" Crepe Myrtle	Private tree	Fence, Bore waterline
136 5610 W 43rd	18" Crepe Myrtle	Private tree	Fence, Bore waterline
137 5610 W 43rd	27" Pine	Private tree	Fence, Bore waterline
138 5619 W 43rd	18" Magnolia	50% dead, No protection warranted	
139 5602 W 43rd	8" Cedar	Private tree, will not be impacted	
140 5602 W 43rd	28" Live Oak	Ordinance tree	Hand dig for bend and for fire hydrant, Fence, Bore waterline
141 5522 W 43rd	25" Pine	Private tree	Fence, Bore waterline
142 5522 W 43rd	12" Pecan	90% dead, Private, will not be impacted	
143 5518 W 43rd	24" Magnolia	Private tree	Fence, Bore waterline
144 5514 W 43rd	22" Magnolia	Private tree	Fence, Bore waterline
145 5514 W 43rd	12" Live Oak	Private tree	Fence, Bore waterline
146 5514 W 43rd	2" Sago	Private tree, will not be impacted	
147 5514 W 43rd	18" Live Oak	Private tree	Fence, Bore waterline
148 5510 W 43rd	2" Crepe Myrtle	Private tree, will not be impacted	
149 5502 W 43rd	16" Magnolia	Dead, Private, will not be impacted	
150 5503 W 43rd	25" American Elm	90% dead, Private, will not be impacted	
151 5430 W 43rd	24" Live Oak	Ordinance tree	Root prune for waterline, Fence
Trees on Mary Lou Street			
152 5014 Mary Lou	16" Water Oak	Private tree	Fence, Bore waterline
153 5014 Mary Lou	12" Live Oak	Ordinance tree	Fence, Bore waterline
154 5018 Mary Lou	7" Crepe Myrtle	Not ordinance tree	
155 5018 Mary Lou	4" Crepe Myrtle	Not ordinance tree	
156 5018 Mary Lou	22" Tallow	Ordinance tree	Fence, Bore waterline
157 5026 Mary Lou	2" Pecan	Private tree, will not be impacted	
158 5030 Mary Lou	12" Crepe Myrtle	Not ordinance tree	
159 5030 Mary Lou	14" Pecan	Private tree	Fence, Bore waterline
160 5030 Mary Lou	6" Crepe Myrtle	Not ordinance tree	
161 5030 Mary Lou	12" Water Oak	Private tree	Fence, Bore waterline
162 5702 Weeping Willow	6" Crepe Myrtle	Not ordinance tree	
163 5030 Mary Lou	5" Wisteria	Not ordinance tree	
164 5030 Mary Lou	16" Mulberry	Not ordinance tree	
165 5038 Mary Lou	4" Crepe Myrtle	Not ordinance tree	
166 5038 Mary Lou	6" Pecan	Private tree	Fence, Bore waterline
167 5038 Mary Lou	4" Crepe Myrtle	Private tree	
168 5038 Mary Lou	13" Pecan	Private tree	Fence, Bore waterline
169 5042 Mary Lou	2" Crepe Myrtle	Not ordinance tree	
170 5042 Mary Lou	6" Live Oak	Ordinance tree	Fence, Bore waterline
171 5042 Mary Lou	4" Crepe Myrtle	Not ordinance tree	

NOTE:
THIS TREE PROTECTION PLAN WAS DEVELOPED WITH INFORMATION PROVIDED BY DESIGN ENGINEER IN DRAWINGS DATED JANUARY 2013. THE PLAN CONSIDERS ALL FITTINGS, VERTICAL OFFSETS AND AREAS OF NECESSARY EXCAVATION. CHANGES MADE TO DESIGN MAY COMPROMISE THE TREE PROTECTION PLAN. REFER TO SPECIFICATIONS 01562 AND 02915. CONDITION OF EACH TREE IS BASED ON VISUAL EVALUATION AT TIME OF DESIGN. CONDITION AND STRUCTURAL INTEGRITY OF EACH TREE IS NOT GUARANTEED BY DESIGNER AT ANY POINT IN THE FUTURE, AS ENVIRONMENTAL AND MAINTENANCE INFLUENCES ON EACH TREE CAN NOT BE DETERMINED BY DESIGNER.

TREE PRESERVATION PLAN LEGEND

- 1 — TREE NUMBER/LOCATION
- ① — TREE TO BE REMOVED
- -X-X- — TREE PROTECTION FENCE
- ——— — ROOT PRUNING TRENCH
- ⊙ — REPLACEMENT PLANTING SPECIES AND SIZE/TYPE

Tree No. Location	Description	Comments	Treatment
Trees on Reno Street			
172 5606 W 43rd	7" Burford Holly	Not ordinance tree	
173 5606 W 43rd	6" Catalpa	Not ordinance tree	
174 5606 W 43rd	22" Lacebark Elm	Ordinance tree	Fence, Bore waterline
175 5603 De Milo	15" Pear	Not ordinance tree	
176 5603 De Milo	15" Pear	Not ordinance tree	

S&B INFRASTRUCTURE, LTD.
Texas PE Firm Registration Number: F-1582

DESIGN ENGINEER NAME:
ADDRESS:
TELEPHONE: 713-845-5401
TX FIRM NUMBER: F-1582

SURVEYED BY: UNITED ENG. INC.
FB No. P-5673

C.N. Koehl
Urban Forestry, Inc.
210 Stone Bush Ct. • Katy, Texas 77493
281-391-0922 ckoehl@koehlurbanforestry.com
APPROVED: Chris N Koehl 01-21-2013

CITY OF HOUSTON
DEPARTMENT OF PUBLIC WORKS AND ENGINEERING

WATER LINE REPLACEMENT
IN FOREST PINES AREA

TREE PROTECTION PLAN
SHEET 3 OF 16

WBS NUMBER
S-000035-0130-4

DRAWING SCALE
1"=40'

CITY OF HOUSTON PM
JOHN MSIGWA, P.E.

SHEET NO. 120 OF 143

50281

DATE: Jan 21, 2013-2:52pm USERNAME: ewalk FILENAME: 120-SP Forest Pines 16-3.dwg

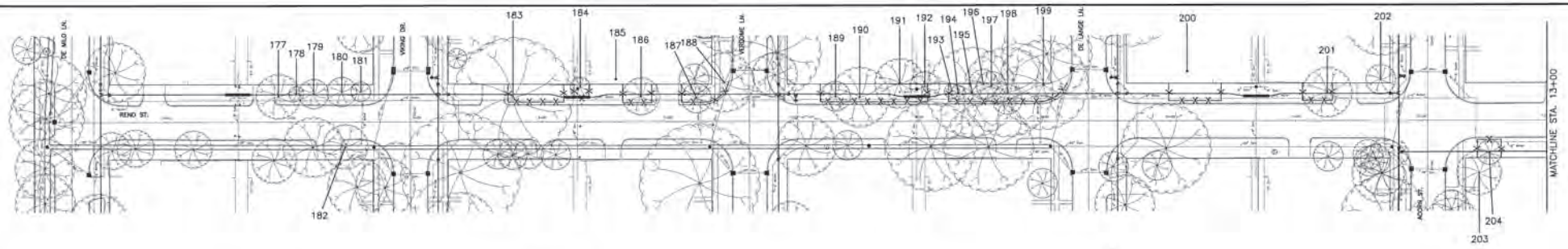

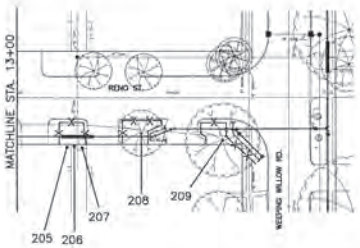

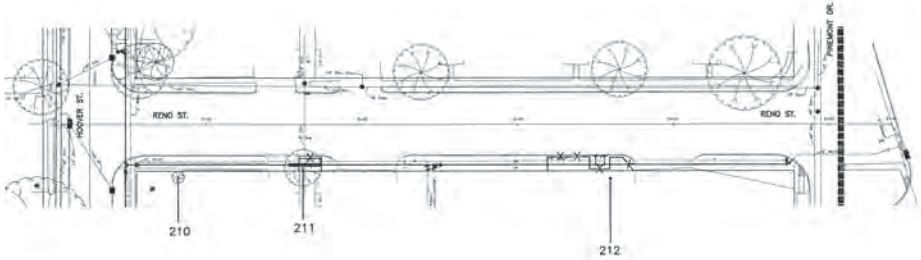

0 20 40 80

Tree No.	Location	Description	Comments	Treatment
Trees on Reno Street				
177	5701 Viking	18" Arborvitae	Not ordinance tree	
178	5701 Viking	4" Crepe Myrtle	Not ordinance tree	
179	5701 Viking	12" Crepe Myrtle	Not ordinance tree	
180	5701 Viking	5" Crape Myrtle	Not ordinance tree	
181	5701 Viking	5" Crepe Myrtle	Not ordinance tree	
182	Not available	16" Arborvitae	Not ordinance tree	
183	5702 Viking	35" Live Oak	Ordinance tree	Fence, Bore waterline
184	5702 Viking	3" Water Oak	Ordinance tree	Fence, Bore waterline
185	Not available	10" Pecan	Private tree, will not be impacted	
186	Not available	11" Water Oak	Ordinance tree	Fence, Bore waterline
187	Not available	12" Pine	Ordinance tree	Fence, Bore waterline
188	Not available	16" Pine	Ordinance tree	Fence, Bore waterline
189	Not available	8" Water Oak	Ordinance tree	Fence, Bore waterline
190	Not available	24" Water Oak	Ordinance tree	Fence, Bore waterline
191	Not available	22" Pecan	Private tree	Fence, Bore waterline
192	Not available	12" Crepe Myrtle	Not ordinance tree	
193	Not available	6' Yucca	Not ordinance tree	
194	Not available	1' Palm	Not ordinance tree	
195	Not available	25" Mulberry	30% dieback, Ordinance tree	Fence, Bore waterline
196	Not available	8' Yucca	Not ordinance tree	
197	Not available	1' Sago	Not ordinance tree	
198	Not available	24" Live Oak	Ordinance tree	Fence, Bore waterline
199	Not available	28" Live Oak	Ordinance tree	Fence, Bore waterline
200	Not available	25" Arizona Ash	Private tree	Fence, Bore waterline
201	Not available	16" Pecan	Ordinance tree	Fence, Bore waterline
202	Not available	5' Sawtooth Oak	Private tree, will not be impacted	
203	Not available	12" Magnolia	Private tree, will not be impacted	
204	Not available	5" Magnolia	40% dieback, Ordinance tree	Fence, Bore waterline
205	Not available	12" American Elm	Private tree	Fence, Bore waterline
206	Not available	18" Sugarberry	Private tree	Fence, Bore waterline
207	Not available	12" Sugarberry	Private tree	Fence, Bore waterline
208	Not available	10" Shumard Oak	Ordinance tree	Root prune for bend, Fence, Bore waterline
209	Not available	24" Live Oak	Ordinance tree	Root prune for bend, Fence, Bore waterline
210	Not available	4" Texas Mountain Laurel	Private tree, will not be impacted	
211	Not available	8" Shumard Oak	Ordinance tree	Fence, Bore waterline
212	Not available	34" Cottonwood	Private tree	Root prune for top & lead, Fence, Bore waterline

NOTE:
THIS TREE PROTECTION PLAN WAS DEVELOPED WITH INFORMATION PROVIDED BY DESIGN ENGINEER IN DRAWINGS DATED JANUARY 2013. THE PLAN CONSIDERS ALL FITTINGS, VERTICAL OFFSETS AND AREAS OF NECESSARY EXCAVATION. CHANGES MADE TO DESIGN MAY COMPROMISE THE TREE PROTECTION PLAN. REFER TO SPECIFICATIONS 01562 AND 02915. CONDITION OF EACH TREE IS BASED ON VISUAL EVALUATION AT TIME OF DESIGN. CONDITION AND STRUCTURAL INTEGRITY OF EACH TREE IS NOT GUARANTEED BY DESIGNER AT ANY POINT IN THE FUTURE, AS ENVIRONMENTAL AND MAINTENANCE INFLUENCES ON EACH TREE CAN NOT BE DETERMINED BY DESIGNER.

TREE PRESERVATION PLAN LEGEND

- 1 — TREE NUMBER/LOCATION
- (1) — TREE TO BE REMOVED
- -X-X- — TREE PROTECTION FENCE
- ——i — ROOT PRUNING TRENCH
- ⊙ — REPLACEMENT PLANTING SPECIES AND SIZE/TYPE

S&B INFRASTRUCTURE, LTD.
Texas PE Firm Registration Number: F-9282
DESIGN ENGINEER NAME:
ADDRESS:
TELEPHONE: 713-845-5401
TX FIRM NUMBER: F-1582
SURVEYED BY: UNITED ENG. INC.
FB No. P-5673
C.N. Koehl
Urban Forestry, Inc
210 Stone Bush Ct. • Katy, Texas 77493
281-391-0022 ckoehl@koehlurbanforestry.com
APPROVED: C.N. Koehl 01-21-2015

CITY OF HOUSTON
DEPARTMENT OF PUBLIC WORKS AND ENGINEERING

WATER LINE REPLACEMENT
IN FOREST PINES AREA

TREE PROTECTION PLAN
SHEET 4 OF 16

WBS NUMBER
S-000035-0130-4

DRAWING SCALE
1"=40'

CITY OF HOUSTON PM
JOHN MSIGWA, P.E.

SHEET NO. 121 OF 143

50281

DATE: Jan 21, 2015-2:02pm USERNAME: Josh FILENAME: 12b-SI Forest Pines TP-4.dwg

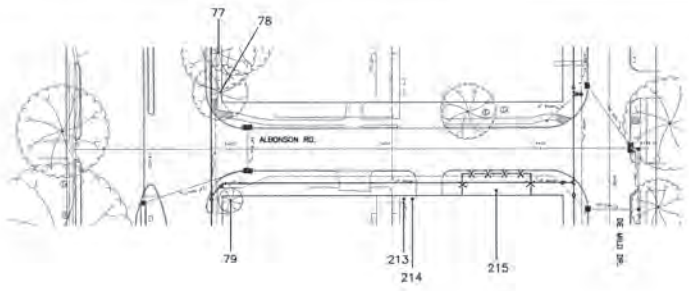

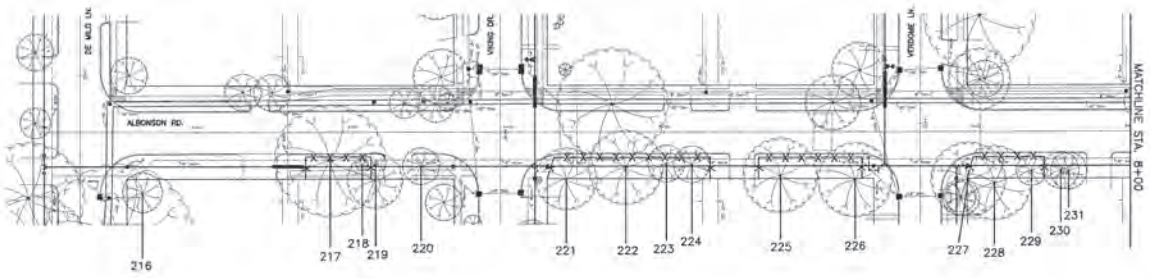

Tree No. Location	Description	Comments	Treatment
Trees on Alabonson Road			
213 6003 De Milo	2' Sago	Private tree, will not be impacted	
214 6003 De Milo	3" Crepe Myrtle	Private tree, will not be impacted	
215 6003 De Milo	20" Tallow	Ordinance tree	Fence, Bore waterline
216 5914 De Milo	6" Ligustrum	Private tree, will not be impacted	
217 5915 Viking	25" Water Oak	Ordinance tree	Fence, Bore waterline
218 5915 Viking	1" Crepe Myrtle	Not ordinance tree	
219 5915 Viking	1" Crepe Myrtle	Not ordinance tree	
220 5915 Viking	10" Sweetgum	Not ordinance tree	
221 5914 Viking	18" Water Oak	Ordinance tree	Fence, Bore waterline
222 5914 Viking	24" Water Oak	Ordinance tree	Fence, Bore waterline
223 5914 Viking	11" Pine	Ordinance tree	Fence, Bore waterline
224 5914 Viking	14" Pine	Ordinance tree	Fence, Bore waterline
225 5915 Verdome	20" Shumard Oak	Ordinance tree	Fence, Bore waterline
226 5915 Verdome	22" Water Oak	Ordinance tree	Root prune for tee, Fence, Bore waterline
227 5914 Verdome	1' Sago	Not ordinance tree	
228 5914 Verdome	25" Water Oak	Private tree	Fence, Bore waterline
229 5914 Verdome	7" Pecan	Ordinance tree	Fence, Bore waterline
230 5914 Verdome	4" Crepe Myrtle	Not ordinance tree	
231 5914 Verdome	4" Crepe Myrtle	Not ordinance tree	

NOTE:
THIS TREE PROTECTION PLAN WAS DEVELOPED WITH INFORMATION PROVIDED BY DESIGN ENGINEER IN DRAWINGS DATED JANUARY 2013. THE PLAN CONSIDERS ALL FITTINGS, VERTICAL OFFSETS AND AREAS OF NECESSARY EXCAVATION. CHANGES MADE TO DESIGN MAY COMPROMISE THE TREE PROTECTION PLAN. REFER TO SPECIFICATIONS 01562 AND 02915. CONDITION OF EACH TREE IS BASED ON VISUAL EVALUATION AT TIME OF DESIGN. CONDITION AND STRUCTURAL INTEGRITY OF EACH TREE IS NOT GUARANTEED BY DESIGNER AT ANY POINT IN THE FUTURE, AS ENVIRONMENTAL AND MAINTENANCE INFLUENCES ON EACH TREE CAN NOT BE DETERMINED BY DESIGNER.

0 20 40 80

TREE PRESERVATION PLAN LEGEND

1	TREE NUMBER/LOCATION
①	TREE TO BE REMOVED
-X-X-	TREE PROTECTION FENCE
⊢—⊣	ROOT PRUNING TRENCH
⊙	REPLACEMENT PLANTING SPECIES AND SIZE/TYPE

S&B INFRASTRUCTURE LTD.
Texas PE Firm Registration Number: F-1582

DESIGN ENGINEER NAME:
ADDRESS:
TELEPHONE: 713-845-5401
TX FIRM NUMBER: F-1582
SURVEYED BY: UNITED ENG. INC.
FB No. P-5673

C.N. Koehl
Urban Forestry, Inc
210 Stone Bush Ct. • Katy, Texas 77493
281-391-0022 ckoehl@koehlurbanforestry.com
APPROVED: Craig N. Koehl 01-21-2013

CITY OF HOUSTON
DEPARTMENT OF PUBLIC WORKS AND ENGINEERING

WATER LINE REPLACEMENT
IN FOREST PINES AREA

TREE PROTECTION PLAN
SHEET 5 OF 16

WBS NUMBER
S-000035-0130-4

DRAWING SCALE
1"=40'

CITY OF HOUSTON PM
JOHN MSIGWA, P.E.

SHEET NO. 122 OF 143

50281

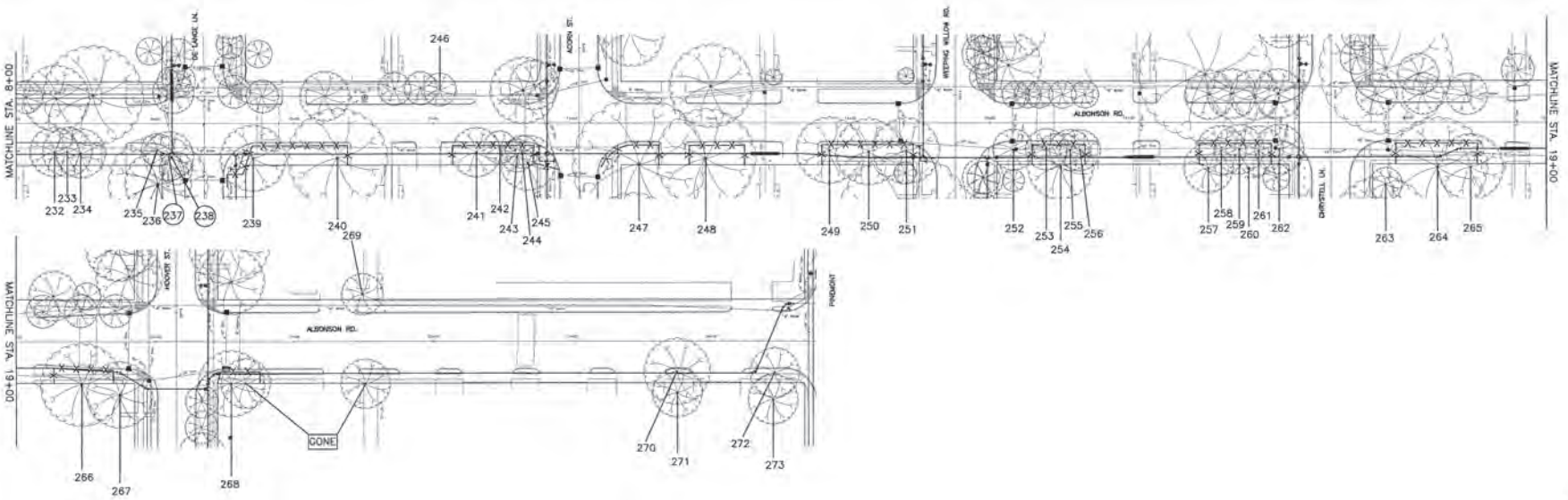

0 20 40 80

Tree No.	Location	Description	Comments	Treatment
Trees on Albonson Road				
232	5915	De Lange	6" Crepe Myrtle	Not ordinance tree	
233	5915	De Lange	6" Crepe Myrtle	Not ordinance tree	
234	5915	De Lange	6" Crepe Myrtle	Not ordinance tree	
235	5915	De Lange	2" Crepe Myrtle	Not ordinance tree	
236	5915	De Lange	28" Arizona Ash	Private tree, will not be impacted	
237	5915	De Lange	12" Crepe Myrtle	Not ordinance tree, remove for bends	Remove tree; no replacement required
238	5915	De Lange	3" Prickly Pear	Not ordinance tree, remove for bends	Remove tree; no replacement required
239	5914	De Lange	22" Arizona Ash	Ordinance tree	Root prune for tee, Fence, Bore waterline
240	5914	De Lange	36" Arizona Ash	Ordinance tree	Fence, Bore waterline
241	5915	Acorn	13" Overcup Oak	Ordinance tree	Fence, Bore waterline
242	5915	Acorn	10" Pine	Ordinance tree	Fence, Bore waterline
243	5915	Acorn	8" Pine	Ordinance tree	Fence, Bore waterline
244	5915	Acorn	15" Pine	Ordinance tree	Fence, Bore waterline
245	5915	Acorn	22" Pine	Ordinance tree	Root prune for tee, Fence, Bore waterline
246	6003	Acorn	5" Juniper	Not ordinance tree	
247	5914	Acorn	26" Water Oak	Ordinance tree	Fence, Bore waterline
248	5914	Acorn	25" Live Oak	Ordinance tree	Fence, Bore waterline
249	5915	Weeping Willow	21" Live Oak	Ordinance tree	Fence, Bore waterline
250	5915	Weeping Willow	22" Live Oak	Ordinance tree	Fence, Bore waterline
251	5915	Weeping Willow	16" Live Oak	Ordinance tree	Root prune for tee, Fence, Bore waterline
252	5914	Weeping Willow	8" Crepe Myrtle	Not ordinance tree	
253	5914	Weeping Willow	2" Crepe Myrtle	Not ordinance tree	
254	5914	Weeping Willow	15" Water Oak	Private tree	Fence, Bore waterline
255	5914	Weeping Willow	8" Crepe Myrtle	Not ordinance tree	
256	5914	Weeping Willow	8" Crepe Myrtle	Not ordinance tree	
257	5915	Chrystell	14" Live Oak	Private tree	Fence, Bore waterline
258	5915	Chrystell	8" Crepe Myrtle	Not ordinance tree	
259	5915	Chrystell	8" Crepe Myrtle	Not ordinance tree	
260	5915	Chrystell	12" Water Oak	Private tree	Fence, Bore waterline
261	5915	Chrystell	6" Crepe Myrtle	Not ordinance tree	
262	5915	Chrystell	12" Crepe Myrtle	Not ordinance tree	
263	5914	Chrystell	4" Pecan	Private tree, will not be impacted	
264	5914	Chrystell	25" Live Oak	Private tree	Hand dig for bend, Fence, Bore waterline
265	5914	Chrystell	22" Live Oak	Private tree	Hand dig for bend, Fence, Bore waterline
266	5915	Hoover	20" Live Oak	Private tree	Fence, Bore waterline
267	5915	Hoover	22" Arizona Ash	50% topped, Private, will not be impacted	
268	5914	Hoover	16" Pine	Private tree	Fence, Bore waterline
269	6002	Hoover	8" Arborvitae	Private tree, will not be impacted	
270	5914	Hoover	16" Arizona Ash	Not ordinance tree	
271	5914	Hoover	6" Arizona Ash	Private tree, will not be impacted	
272	5914	Hoover	14" Tallow	Not ordinance tree	
273	5914	Hoover	12" Pine	Private tree, will not be impacted	

NOTE:
THIS TREE PROTECTION PLAN WAS DEVELOPED WITH INFORMATION PROVIDED BY DESIGN ENGINEER IN DRAWINGS DATED JANUARY 2013. THE PLAN CONSIDERS ALL FITTINGS, VERTICAL OFFSETS AND AREAS OF NECESSARY EXCAVATION. CHANGES MADE TO DESIGN MAY COMPROMISE THE TREE PROTECTION PLAN. REFER TO SPECIFICATIONS 01562 AND 02915. CONDITION OF EACH TREE IS BASED ON VISUAL EVALUATION AT TIME OF DESIGN. CONDITION AND STRUCTURAL INTEGRITY OF EACH TREE IS NOT GUARANTEED BY DESIGNER AT ANY POINT IN THE FUTURE, AS ENVIRONMENTAL AND MAINTENANCE INFLUENCES ON EACH TREE CAN NOT BE DETERMINED BY DESIGNER.

TREE PRESERVATION PLAN LEGEND

- 1 — TREE NUMBER/LOCATION
- (1) — TREE TO BE REMOVED
- -X-X- — TREE PROTECTION FENCE
- ----- — ROOT PRUNING TRENCH
- ⊙ — REPLACEMENT PLANTING SPECIES AND SIZE/TYPE

S&R INFRASTRUCTURE, LTD.
Texas PE Firm Registration Number: F-1582

DESIGN ENGINEER NAME:
ADDRESS:
TELEPHONE: 713-845-5401
TX FIRM NUMBER: F-1582
SURVEYED BY: UNITED ENG, INC.
FB No. P-5673

C.N. Koehl
Urban Forestry, Inc.
210 Stone Bush Ct. • Katy, Texas 77493
281-391-0922 ckoehl@koehlurbanforestry.com
APPROVED: Cindy N. Koehl 01-21-2013

CITY OF HOUSTON
DEPARTMENT OF PUBLIC WORKS AND ENGINEERING

WATER LINE REPLACEMENT
IN FOREST PINES AREA

TREE PROTECTION PLAN
SHEET 6 OF 16

WBS NUMBER: S-000035-0130-4

DRAWING SCALE: 1"=40'

CITY OF HOUSTON PM: CHIDIN MSIGWA, P.E.

SHEET NO. 123 OF 143

50281 LICENSED TEXAS

DATE: Jan 21, 2013 - 2:53pm USERNAME: rwb FILENAME: 125-00 Travel Pine 01-6.dwg

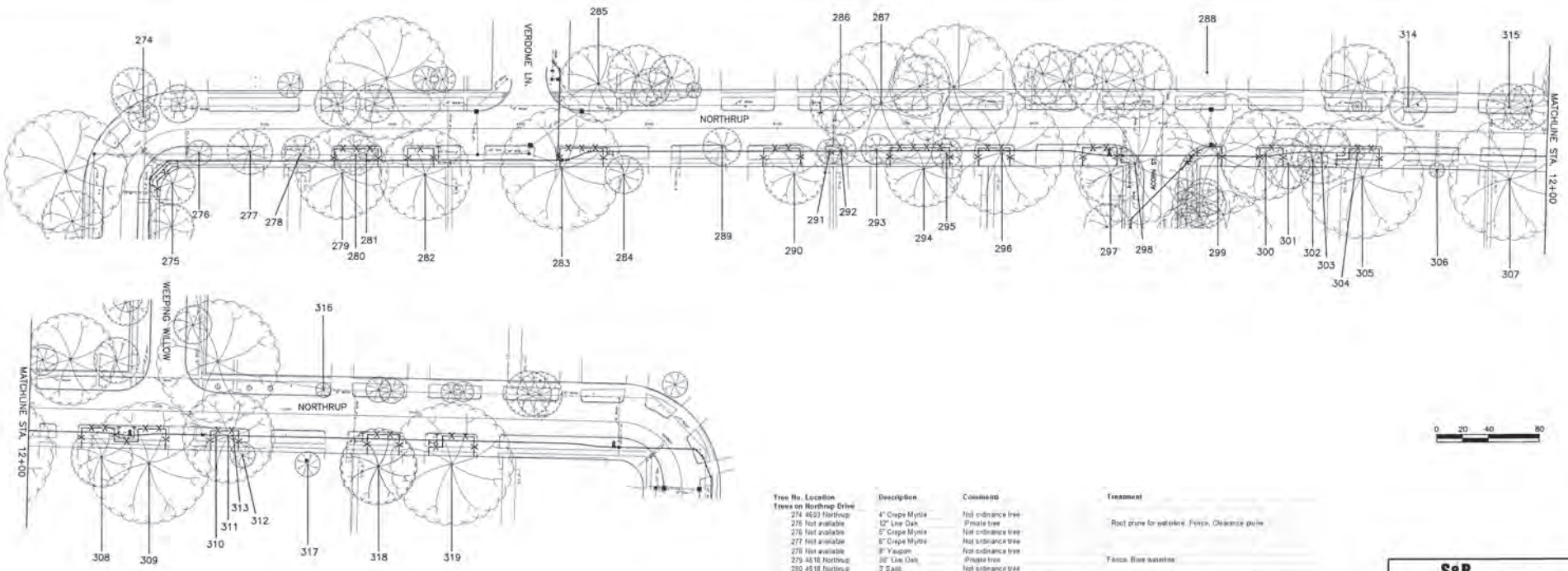

0 20 40 80

NOTE:
THIS TREE PROTECTION PLAN WAS DEVELOPED WITH INFORMATION PROVIDED BY DESIGN ENGINEER IN DRAWINGS DATED JANUARY 2013. THE PLAN CONSIDERS ALL FITTINGS, VERTICAL OFFSETS AND AREAS OF NECESSARY EXCAVATION. CHANGES MADE TO DESIGN MAY COMPROMISE THE TREE PROTECTION PLAN. REFER TO SPECIFICATIONS 01562 AND 02915. CONDITION OF EACH TREE IS BASED ON VISUAL EVALUATION AT TIME OF DESIGN. CONDITION AND STRUCTURAL INTEGRITY OF EACH TREE IS NOT GUARANTEED BY DESIGNER AT ANY POINT IN THE FUTURE, AS ENVIRONMENTAL AND MAINTENANCE INFLUENCES ON EACH TREE CAN NOT BE DETERMINED BY DESIGNER.

TREE PRESERVATION PLAN LEGEND

- 1 — TREE NUMBER/LOCATION
- (1) — TREE TO BE REMOVED
- -X-X- — TREE PROTECTION FENCE
- RPT — ROOT PRUNING TRENCH
- ⊙ — REPLACEMENT PLANTING SPECIES AND SIZE/TYPE

Tree No. Location	Description	Comments	Treatment
Trees on Northrup Drive			
274 4603 Northrup	4" Crepe Myrtle	Not ordinance tree	
275 Not available	12" Live Oak	Private tree	Root prune for waterline, Fence, Clearance prune
276 Not available	5" Crepe Myrtle	Not ordinance tree	
277 Not available	6" Crepe Myrtle	Not ordinance tree	
278 Not available	8" Yaupon	Not ordinance tree	
279 4618 Northrup	36" Live Oak	Private tree	Fence, Bore waterline
280 4618 Northrup	3" Sago	Not ordinance tree	
281 4618 Northrup	8" Ligustrum	Not ordinance tree	
282 4618 Northrup	28" Arizona Ash	Private tree	Root prune for tap & lead, Fence, Bore waterline
283 4622 Northrup	40" Live Oak	Private tree	Hand dig for bend, Fence, Bore waterline
284 4622 Northrup	18" Live Oak	Private tree, will not be impacted	
285 4703 Northrup	26" Live Oak	Private tree, will not be impacted	
286 4715 Northrup	18" Water Oak	Ordinance tree	Root prune for lead
287 4719 Northrup	24" Water Oak	Ordinance tree	Hand dig lead
288 4903 Northrup	28" Arizona Ash	Private tree, will not be impacted	
289 4710 Northrup	2 Sago	Not ordinance tree	
290 4714 Northrup	18" Live Oak	Private tree	Fence, Bore waterline
291 4714 Northrup	5" Crepe Myrtle	Not ordinance tree	
292 4718 Northrup	1 Sago	Not ordinance tree	
293 4718 Northrup	1 Sago	Not ordinance tree	
294 4718 Northrup	25" Live Oak	Private tree	Fence, Bore waterline
295 4718 Northrup	8" Pecan	Ordinance tree	Fence, Bore waterline
296 4718 Northrup	36" Arizona Ash	Ordinance tree	Fence, Bore waterline
297 4718 Northrup	15" Magnolia	Private tree	Root prune for tap, Fence, Bore waterline
298 4718 Northrup	16" Oleander	Not ordinance tree	
299 Not available	23" Water Oak	20% dieback, Ordinance tree	Fence, Bore waterline
300 Not available	22" Water Oak	Ordinance tree	Fence, Bore waterline
301 Not available	4" Ligustrum	Not ordinance tree	
302 Not available	7" Catalpa	Not ordinance tree	
303 Not available	12" Tallow	Not ordinance tree	
304 4914 Northrup	2" Crape Myrtle	Not ordinance tree	
305 4914 Northrup	36" Arizona Ash	Private tree	Root prune for tap & lead, Fence, Bore waterline
306 4914 Northrup	8" Prunus	Private tree, will not be impacted	
307 Not available	30" Arizona Ash	50% dieback, Private, will not be impacted	
308 Not available	14" Arizona Ash	Private tree, will not be impacted	
309 4926 Northrup	36" Arizona Ash	Private tree	Root prune for fire hydrant, Fence, Bore waterline
310 5005 Northrup	2" Japanese Magnolia	Ordinance tree	Fence, Bore waterline
311 5005 Northrup	4" Magnolia	Ordinance tree	Fence, Bore waterline
312 5006 Northrup	5" Bald cypress	Private tree, will not be impacted	
313 5006 Northrup	5" Buttonbrush	Not ordinance tree	
314 4511 Northrup	10" Arbovitae	Not ordinance tree	
315 4519 Northrup	18" Crape Myrtle	Not ordinance tree	
316 5007 Northrup	3" Crape Myrtle	Not ordinance tree	
317 5006 Northrup	3" Ligustrum	Private fruit, will not be impacted	
318 5010 Northrup	24" Live Oak	Private tree	Root prune for tap & lead, Fence, Bore waterline
319 5010 Northrup	24" Arizona Ash	Private tree	Root prune for tap & lead, Fence, Bore waterline

S&B INFRASTRUCTURE, LTD.
Texas PE Firm Registration Number: F-1582

DESIGN ENGINEER NAME:
ADDRESS:
TELEPHONE: 713-845-5401
TX FIRM NUMBER: F-1582

SURVEYED BY: UNITED ENG. INC.
FB No. P-5673

C.N. Koehl
Urban Forestry, Inc
210 Stone Bush Ct. • Katy, Texas 77493
281-391-0922 ckoehl@koehlurbanforestry.com

APPROVED: Craig N Koehl 01-21-2013

CITY OF HOUSTON
DEPARTMENT OF PUBLIC WORKS AND ENGINEERING

WATER LINE REPLACEMENT
IN FOREST PINES AREA

TREE PROTECTION PLAN
SHEET 7 OF 16

WBS NUMBER: S-000935-0130-4

DRAWING SCALE: 1"=40'

CITY OF HOUSTON PM: JOHN MSIGWA, P.E.

SHEET NO. 124 OF 143

50281 REGISTERED PROFESSIONAL ENGINEER HOUSTON, TEXAS

DATE: Jan 25, 2013-2:53pm USERNAME: Keith Richard Price P:\...\.dwg

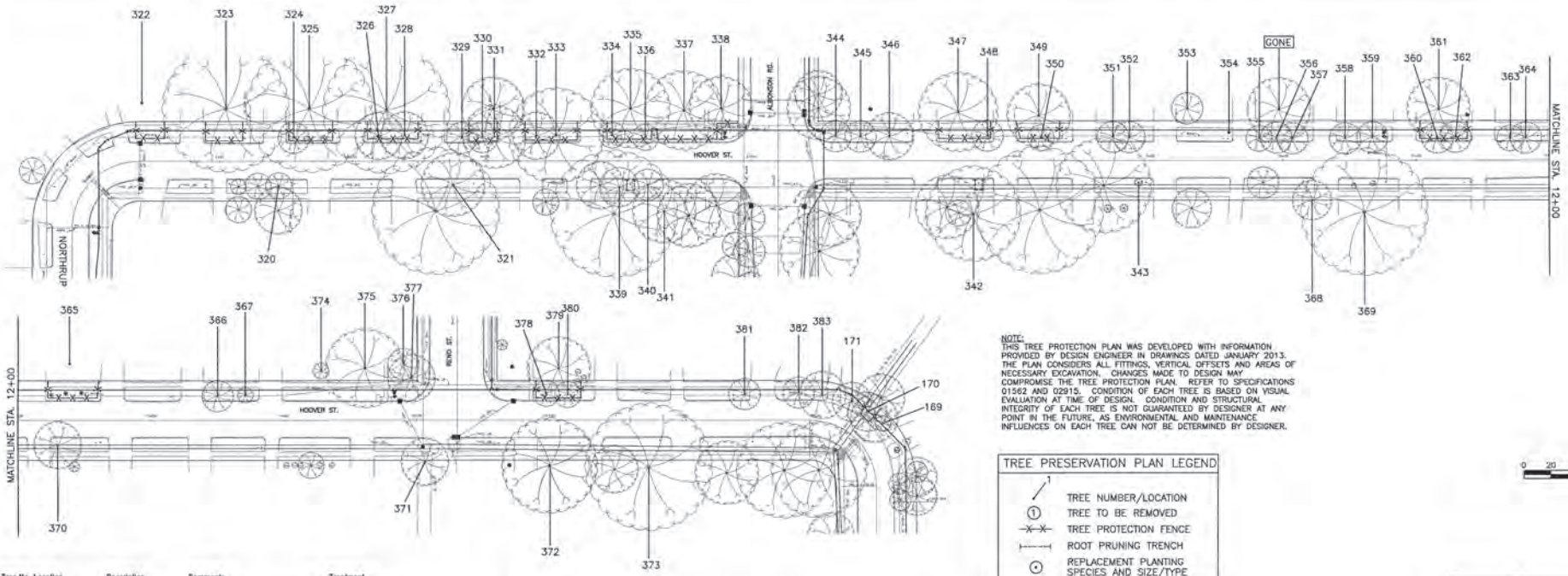

NOTE:
THIS TREE PROTECTION PLAN WAS DEVELOPED WITH INFORMATION PROVIDED BY DESIGN ENGINEER IN DRAWINGS DATED JANUARY 2013. THE PLAN CONSIDERS ALL FITTINGS, VERTICAL OFFSETS AND AREAS OF NECESSARY EXCAVATION. CHANGES MADE TO DESIGN MAY COMPROMISE THE TREE PROTECTION PLAN. REFER TO SPECIFICATIONS 01562 AND 02915. CONDITION OF EACH TREE IS BASED ON VISUAL EVALUATION AT TIME OF DESIGN. CONDITION AND STRUCTURAL INTEGRITY OF EACH TREE IS NOT GUARANTEED BY DESIGNER AT ANY POINT IN THE FUTURE, AS ENVIRONMENTAL AND MAINTENANCE INFLUENCES ON EACH TREE CAN NOT BE DETERMINED BY DESIGNER.

TREE PRESERVATION PLAN LEGEND

- 1 — TREE NUMBER/LOCATION
- (1) — TREE TO BE REMOVED
- -X-X- — TREE PROTECTION FENCE
- |----| — ROOT PRUNING TRENCH
- ⊙ — REPLACEMENT PLANTING SPECIES AND SIZE/TYPE

0 20 40 80

Tree No. Location	Description	Comments	Treatment
Trees on Hoover Street			
320 5023 Hoover	4" Crepe Myrtle	Not ordinance tree	
321 6015 Hoover	15" Pine	Ordinance tree	Hand dig lead
322 5030 Hoover	24" Arizona Ash	Private tree	Fence, Bore waterline
323 6026 Hoover	36" Arizona Ash	Private tree	Fence, Bore waterline
324 6022 Hoover	4" Crepe Myrtle	Not ordinance tree	
325 6022 Hoover	36" Arizona Ash	Private tree	Fence, Bore waterline
326 6018 Hoover	5" Crepe Myrtle	Not ordinance tree	
327 6018 Hoover	40" Arizona Ash	Private tree	Fence, Bore waterline
328 6018 Hoover	6" Crepe Myrtle	Not ordinance tree	
329 6014 Hoover	12" Crepe Myrtle	Not ordinance tree	
330 6014 Hoover	6" Crepe Myrtle	Not ordinance tree	
331 6014 Hoover	14" Water Oak	Ordinance tree	Fence, Bore waterline
332 6010 Hoover	12" Water Oak	Ordinance tree	Fence, Bore waterline
333 6010 Hoover	26" Water Oak	Ordinance tree	Hand dig tap & lead, Fence, Bore waterline
334 6006 Hoover	4" Magnolia	90% dieback, Ordinance tree	Fence, Bore waterline
335 6006 Hoover	22" Live Oak	Private tree	Fence, Bore waterline
336 6006 Hoover	4" Crepe Myrtle	Not ordinance tree	
337 6002 Hoover	18" Arizona Ash	Private tree	Fence, Bore waterline
338 6002 Hoover	15" Arizona Ash	Private tree	Fence, Bore waterline
339 6007 Hoover	6" Pine	Ordinance tree	Root prune for lead
340 6003 Hoover	8" Pine	Ordinance tree	Root prune for lead
341 6003 Hoover	15" Pine	Private tree, will not be impacted	
342 5911 Hoover	28" Live Oak	Private tree	Root prune for lead
343 5903 Hoover	2" Italian Cypress	Not ordinance tree	
344 5914 Hoover	4" Crepe Myrtle	Not ordinance tree	
345 5914 Hoover	7" Crepe Myrtle	Not ordinance tree	
346 5914 Hoover	12" Crepe Myrtle	Not ordinance tree	
347 5910 Hoover	24" Water Oak	Private tree	Fence, Bore waterline
348 5906 Hoover	4" Arborvitae	Not ordinance tree	
349 5906 Hoover	12" Live Oak	Private tree	Fence, Bore waterline
350 5906 Hoover	4" Arborvitae	Not ordinance tree	
351 5902 Hoover	6" Crepe Myrtle	Not ordinance tree	
352 5902 Hoover	6" Crepe Myrtle	Not ordinance tree	
353 5818 Hoover	10" Live Oak	Private tree, will not be impacted	
354 5814 Hoover	1" Prunus	Not ordinance tree	
355 5814 Hoover	6" Crepe Myrtle	Not ordinance tree	

Tree No. Location	Description	Comments	Treatment
Trees on Hoover Street			
356 5814 Hoover	7" Crepe Myrtle	Not ordinance tree	
357 5814 Hoover	7" Crepe Myrtle	Not ordinance tree	
358 5810 Hoover	3' Sago	Not ordinance tree	
359 5810 Hoover	3' Sago	Not ordinance tree	
360 5806 Hoover	5" Crepe Myrtle	Not ordinance tree	
361 5806 Hoover	24" Arizona Ash	Private tree	Fence, Bore waterline
362 5806 Hoover	7" Crepe Myrtle	Not ordinance tree	
363 5802 Hoover	3" Crepe Myrtle	Not ordinance tree	
364 5802 Hoover	4" Crepe Myrtle	Not ordinance tree	
365 5742 Hoover	25" Live Oak	Private tree	Fence, Bore waterline
366 5734 Hoover	6" Crepe Myrtle	Not ordinance tree	
367 5734 Hoover	2" Crepe Myrtle	Not ordinance tree	
368 5811 Hoover	10" Tallow	Not ordinance tree	
369 5811 Hoover	25" Arizona Ash	Private tree, will not be impacted	
370 5743 Hoover	12" Pine	Ordinance tree	Keep excavation for lead at least 15' from trunk
371 5723 Hoover	18" Pine	Private tree, will not be impacted	
372 5719 Hoover	28" Water Oak	Private tree, will not be impacted	
373 5715 Hoover	25" Arizona Ash	Private tree, will not be impacted	
374 5730 Hoover	4" Crepe Myrtle	Private tree, will not be impacted	
375 5726 Hoover	32" Arizona Ash	Private tree, will not be impacted	
376 5726 Hoover	8" Pear	Private tree, will not be impacted	
377 5726 Hoover	6" Crepe Myrtle	Private tree, will not be impacted	
378 5718 Hoover	5" Crepe Myrtle	Not ordinance tree	
379 5718 Hoover	20" Arizona Ash	Private tree	Fence, Bore waterline
380 5718 Hoover	6" Crepe Myrtle	Not ordinance tree	
381 5710 Hoover	10" Arborvitae	Not ordinance tree	
382 5706 Hoover	12" Arborvitae	Not ordinance tree	
383 5702 Hoover	12" Arborvitae	Not ordinance tree	

S&B INFRASTRUCTURE, LTD.
Texas PE Firm Registration Number F-7687

DESIGN ENGINEER NAME:
ADDRESS:
TELEPHONE: 713-845-5401
TX FIRM NUMBER: F-1582
SURVEYED BY: UNITED ENG. INC.
FB No. P-5673

C.N. Koehl
Urban Forestry, Inc.
210 Stone Bush Ct. • Katy, Texas 77493
281-391-0022 ckoehl@koehlurbanforestry.com
APPROVED: Cindy N. Koehl 01-21-2013

CITY OF HOUSTON
DEPARTMENT OF PUBLIC WORKS AND ENGINEERING

WATER LINE REPLACEMENT
IN FOREST PINES AREA

TREE PROTECTION PLAN
SHEET 8 OF 16

WBS NUMBER
S-000035-0130-4

DRAWING SCALE
1"=40'

CITY OF HOUSTON PM
JOHN MSIGWA, P.E.

SHEET NO. 125 OF 143

50281

DATE: Jan 25, 2013-2:54pm USERNAME: rwb FILENAME: 125-SB Forest Pines 8P-8.dwg

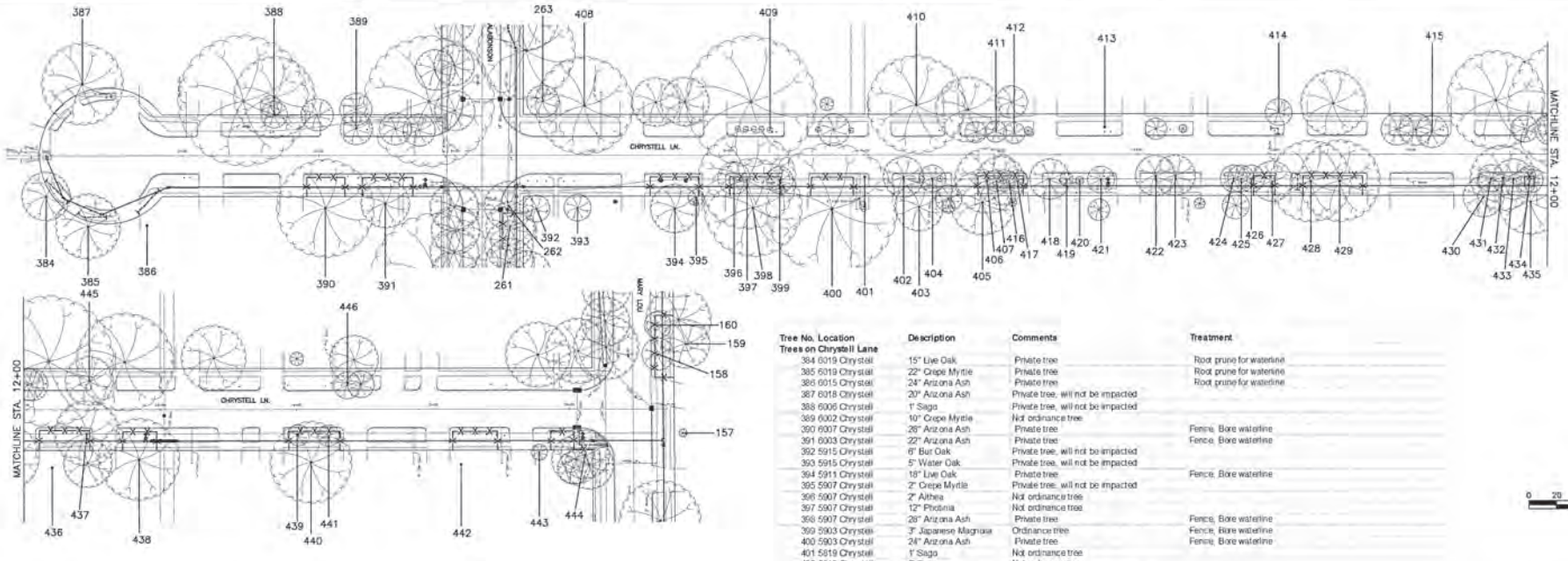

NOTE:
THIS TREE PROTECTION PLAN WAS DEVELOPED WITH INFORMATION PROVIDED BY DESIGN ENGINEER IN DRAWINGS DATED JANUARY 2013. THE PLAN CONSIDERS ALL FITTINGS, VERTICAL OFFSETS AND AREAS OF NECESSARY EXCAVATION. CHANGES MADE TO DESIGN MAY COMPROMISE THE TREE PROTECTION PLAN. REFER TO SPECIFICATIONS 01562 AND 02915. CONDITION OF EACH TREE IS BASED ON VISUAL EVALUATION AT TIME OF DESIGN. CONDITION AND STRUCTURAL INTEGRITY OF EACH TREE IS NOT GUARANTEED BY DESIGNER AT ANY POINT IN THE FUTURE, AS ENVIRONMENTAL AND MAINTENANCE INFLUENCES ON EACH TREE CAN NOT BE DETERMINED BY DESIGNER.

TREE PRESERVATION PLAN LEGEND

- TREE NUMBER/LOCATION
- ① TREE TO BE REMOVED
- TREE PROTECTION FENCE
- ROOT PRUNING TRENCH
- REPLACEMENT PLANTING SPECIES AND SIZE/TYPE

Tree No. Location	Description	Comments	Treatment
Trees on Chrystell Lane			
384 6019 Chrystell	15" Live Oak	Private tree	Root prune for waterline
385 6019 Chrystell	22" Crepe Myrtle	Private tree	Root prune for waterline
386 6015 Chrystell	24" Arizona Ash	Private tree	Root prune for waterline
387 6018 Chrystell	20" Arizona Ash	Private tree, will not be impacted	
388 6006 Chrystell	1' Sago	Private tree, will not be impacted	
389 6002 Chrystell	10" Crepe Myrtle	Not ordinance tree	
390 6007 Chrystell	26" Arizona Ash	Private tree	Fence, Bore waterline
391 6003 Chrystell	22" Arizona Ash	Private tree	Fence, Bore waterline
392 5915 Chrystell	6" But Oak	Private tree, will not be impacted	
393 5915 Chrystell	5" Water Oak	Private tree, will not be impacted	
394 5911 Chrystell	18" Live Oak	Private tree	Fence, Bore waterline
395 5907 Chrystell	2" Crepe Myrtle	Private tree, will not be impacted	
396 5907 Chrystell	2" Althea	Not ordinance tree	
397 5907 Chrystell	12" Photinia	Not ordinance tree	
398 5907 Chrystell	28" Arizona Ash	Private tree	Fence, Bore waterline
399 5903 Chrystell	3" Japanese Magnolia	Ordinance tree	Fence, Bore waterline
400 5903 Chrystell	24" Arizona Ash	Private tree	Fence, Bore waterline
401 5819 Chrystell	1' Sago	Not ordinance tree	
402 5819 Chrystell	3' Sago	Not ordinance tree	
403 5819 Chrystell	16" Shumard Oak	Private tree, will not be impacted	
404 5819 Chrystell	1' Sago	Not ordinance tree	
405 5815 Chrystell	25" Water Oak	Private tree	Fence, Bore waterline
406 5815 Chrystell	2" Pear	Not ordinance tree	
407 5815 Chrystell	6' Palm	Not ordinance tree	
408 5914 Chrystell	26" Water Oak	Private tree, will not be impacted	
409 5906 Chrystell	2" Esplanza	Not ordinance tree	
410 5818 Chrystell	30" Arizona Ash	Private tree, will not be impacted	
411 5814 Chrystell	3" Crepe Myrtle	Not ordinance tree	
412 5814 Chrystell	3" Crepe Myrtle	Not ordinance tree	
413 5810 Chrystell	3" Citrus	Not ordinance tree	
414 5738 Chrystell	18" Pine	Private tree	Root prune for lead
415 5734 Chrystell	5" Crepe Myrtle	50% topped; Not ordinance tree	
416 5815 Chrystell	3" Pear	Not ordinance tree	
417 5815 Chrystell	1' Sago	Not ordinance tree	
418 5811 Chrystell	10" Cedar	Not ordinance tree	
419 5811 Chrystell	5" Texas Mountain Laurel	Not ordinance tree	
420 5811 Chrystell	2" Cedar	Not ordinance tree	
421 5811 Chrystell	5" Cedar	Not ordinance tree	
422 5807 Chrystell	12" Crepe Myrtle	Not ordinance tree	
423 5807 Chrystell	12" Crepe Myrtle	Not ordinance tree	
424 5803 Chrystell	2" Oleander	Not ordinance tree	
425 5803 Chrystell	4" Oleander	Not ordinance tree	
426 5803 Chrystell	3" Crepe Myrtle	Not ordinance tree	
427 5803 Chrystell	8" Baldcypress	Ordinance tree	Hand dig for fire hydrant, Fence, Bore waterline
428 5739 Chrystell	18" Shumard Oak	Ordinance tree	Root prune for tap & lead, Fence, Bore waterline
429 5739 Chrystell	16" Shumard Oak	Ordinance tree	Fence, Bore waterline
430 5731 Chrystell	7" Arborvitae	Private tree, will not be impacted	
431 5731 Chrystell	6" Crepe Myrtle	Not ordinance tree	
432 5731 Chrystell	15" Oleander	Not ordinance tree	
433 5731 Chrystell	7" Crepe Myrtle	Not ordinance tree	
434 5731 Chrystell	5" Magnolia	30% dieback, Ordinance tree	Fence, Bore waterline
435 5727 Chrystell	30' Palm	Private tree, will not be impacted	
436 5727 Chrystell	26" Arizona Ash	Private tree	Fence, Bore waterline
437 5723 Chrystell	17" Pine	Ordinance tree	Hand dig tap & lead, Fence, Bore waterline
438 5723 Chrystell	22" Arizona Ash	Private tree	Hand dig fire hydrant, Fence, Bore waterline
439 5715 Chrystell	1' Sago	Not ordinance tree	
440 5715 Chrystell	26" Arizona Ash	Private tree	Fence, Bore waterline
441 5715 Chrystell	1' Sago	Not ordinance tree	
442 5707 Chrystell	25" Water Oak	Private tree	Fence, Bore waterline
443 5703 Chrystell	4" Japanese Magnolia	Private tree, will not be impacted	
444 5703 Chrystell	12" Baldcypress	Private tree	Root prune for fire hydrant, Fence, Bore waterline
445 5722 Chrystell	3" Crepe Myrtle	Not ordinance tree	
446 5714 Chrystell	2' Sago	Not ordinance tree	

S&R INFRASTRUCTURE, LTD.
Texas PE Firm Registration Number: F-5582

DESIGN ENGINEER NAME:
ADDRESS:
TELEPHONE: 713-845-5401
TX FIRM NUMBER: F-1582
SURVEYED BY: UNITED ENG. INC.
FB No. P-5673

C.N. Koehl
Urban Forestry, Inc.
210 Stone Bush Ct. • Katy, Texas 77493
281-391-6922 ckoehl@koehlurbanforestry.com

APPROVED: C.N. Koehl 01-21-2013

CITY OF HOUSTON
DEPARTMENT OF PUBLIC WORKS AND ENGINEERING

WATER LINE REPLACEMENT
IN FOREST PINES AREA

TREE PROTECTION PLAN
SHEET 9 OF 16

WBS NUMBER
S-000035-0130-4

DRAWING SCALE
1"=40'

CITY OF HOUSTON PM
JOHN MSIGWA, P.E.

SHEET NO. 126 OF 143

50281

DATE: Jan 21, 2013-2:34pm LOGINNAME: rweb FILENAME: 126-SR Forest Pines 16-4.dwg

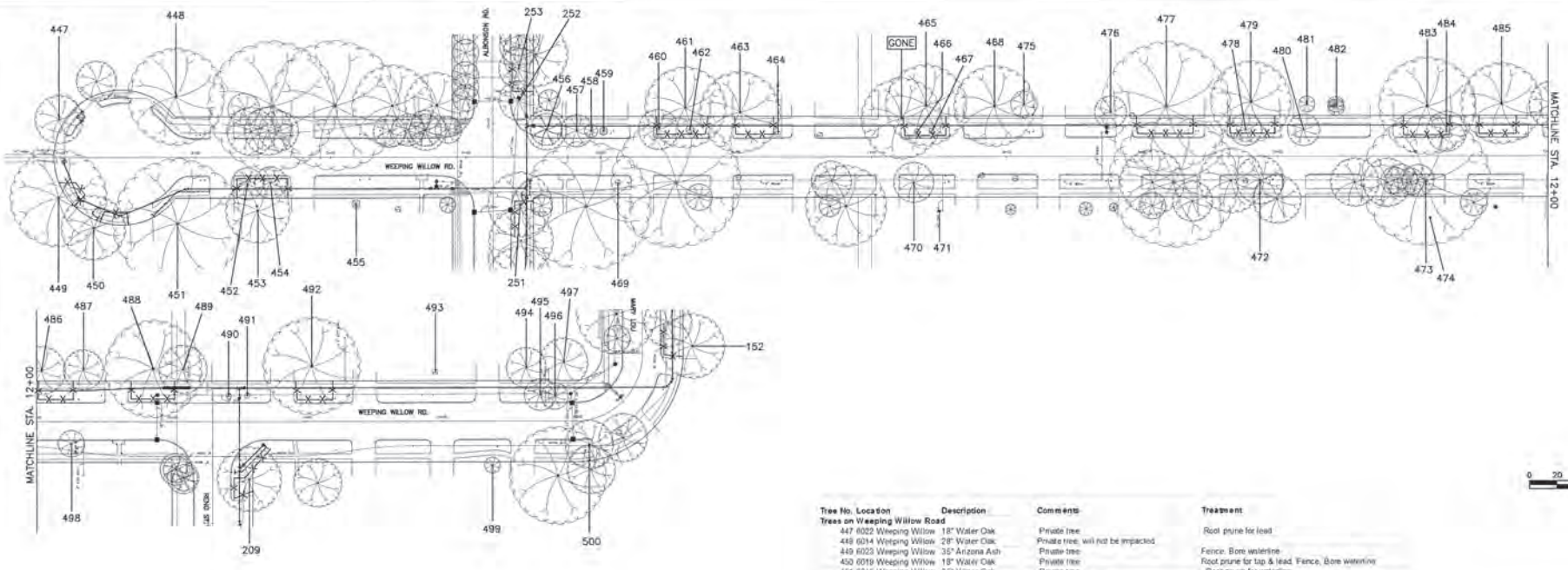

0 20 40 80

NOTE:
THIS TREE PROTECTION PLAN WAS DEVELOPED WITH INFORMATION PROVIDED BY DESIGN ENGINEER IN DRAWINGS DATED JANUARY 2013. THE PLAN CONSIDERS ALL FITTINGS, VERTICAL OFFSETS AND AREAS OF NECESSARY EXCAVATION. CHANGES MADE TO DESIGN MAY COMPROMISE THE TREE PROTECTION PLAN. REFER TO SPECIFICATIONS 01562 AND 02915. CONDITION OF EACH TREE IS BASED ON VISUAL EVALUATION AT TIME OF DESIGN. CONDITION AND STRUCTURAL INTEGRITY OF EACH TREE IS NOT GUARANTEED BY DESIGNER AT ANY POINT IN THE FUTURE, AS ENVIRONMENTAL AND MAINTENANCE INFLUENCES ON EACH TREE CAN NOT BE DETERMINED BY DESIGNER.

TREE PRESERVATION PLAN LEGEND

- TREE NUMBER/LOCATION
- (1) TREE TO BE REMOVED
- TREE PROTECTION FENCE
- ROOT PRUNING TRENCH
- REPLACEMENT PLANTING SPECIES AND SIZE/TYPE

Tree No.	Location	Description	Comments	Treatment
Trees on Weeping Willow Road				
447	6022	Weeping Willow 18" Water Oak	Private tree	Root prune for lead
448	6014	Weeping Willow 28" Water Oak	Private tree, will not be impacted	
449	6023	Weeping Willow 35" Arizona Ash	Private tree	Fence, Bore waterline
450	6019	Weeping Willow 18" Water Oak	Private tree	Root prune for tap & lead, Fence, Bore waterline
451	6015	Weeping Willow 35" Water Oak	Private tree	Root prune for waterline
452	6011	Weeping Willow 6" Crepe Myrtle	Not ordinance tree	
453	6011	Weeping Willow 24" Live Oak	Private tree	Fence, Bore waterline
454	6011	Weeping Willow 8" Crepe Myrtle	Not ordinance tree	
455	6007	Weeping Willow 2" Shumard Oak	Private tree, will not be impacted	
456	5914	Weeping Willow 8" Crepe Myrtle	Not ordinance tree	
457	5914	Weeping Willow 8" Crepe Myrtle	Not ordinance tree	
458	5914	Weeping Willow 1" Sago	Not ordinance tree	
459	5914	Weeping Willow 1" Crepe Myrtle	Not ordinance tree	
460	5910	Weeping Willow 10" Pecan	Ordinance tree	Fence, Bore waterline
461	5910	Weeping Willow 20" Southern Red Oak	Private tree	Fence, Bore waterline
462	5910	Weeping Willow 2" Mulberry	Not ordinance tree	
463	5906	Weeping Willow 22" Water Oak	Private tree	Fence, Bore waterline
464	5906	Weeping Willow 3" Redbud	Not ordinance tree	
465	5818	Weeping Willow 22" Arizona Ash	Private tree	Fence, Bore waterline
466	5818	Weeping Willow 2" Crepe Myrtle	Not ordinance tree	
467	5818	Weeping Willow 2" Crepe Myrtle	Not ordinance tree	
468	5814	Weeping Willow 12" Live Oak	Private tree, will not be impacted	
469	5815	Weeping Willow 2" Crepe Myrtle	Not ordinance tree	
470	5819	Weeping Willow 7" Crepe Myrtle	Not ordinance tree	
471	5819	Weeping Willow 32" Arizona Ash	Private tree, will not be impacted	
472	5803	Weeping Willow 17" Crepe Myrtle	Not ordinance tree	
473	5735	Weeping Willow 2" Japanese Magnolia	Ordinance tree	Keep excavation bit lead at least 5' from trunk
474	5735	Weeping Willow 33" Live Oak	Private tree, will not be impacted	
475	5814	Weeping Willow 6" Pecan	Private tree, will not be impacted	
476	5810	Weeping Willow 4" Crepe Myrtle	Private tree, will not be impacted	
477	5806	Weeping Willow 35" Arizona Ash	Private tree	Fence, Bore waterline
478	5802	Weeping Willow 5" Crepe Myrtle	Not ordinance tree	
479	5802	Weeping Willow 24" Water Oak	Private tree	Fence, Bore waterline
480	5742	Weeping Willow 5" Crepe Myrtle	Not ordinance tree	
481	5742	Weeping Willow 3" Pecan	Private tree, will not be impacted	
482	5742	Weeping Willow 4" Water Oak	Private tree, will not be impacted	
483	5738	Weeping Willow 28" Water Oak	Private tree	Fence, Bore waterline
484	5734	Weeping Willow 10" Cedar	Not ordinance tree	
485	5734	Weeping Willow 31" Arizona Ash	Private tree	Fence, Bore waterline
486	5726	Weeping Willow 26" Live Oak	Private tree	Fence, Bore waterline
487	5726	Weeping Willow 10" Water Oak	Private tree, will not be impacted	
488	5722	Weeping Willow 30" Water Oak	Private tree	Fence, Bore waterline
489	5718	Weeping Willow 12" Arizona Ash	Private tree, will not be impacted	
490	5718	Weeping Willow 6" Crepe Myrtle	Not ordinance tree	
491	5718	Weeping Willow 6" Crepe Myrtle	Not ordinance tree	
492	5714	Weeping Willow 35" Water Oak	Private tree	Fence, Bore waterline
493	5710	Weeping Willow 10" Bougainvillea	Private tree, will not be impacted	
494	5709	Weeping Willow 13" American Elm	Private tree, will not be impacted	
495	5706	Weeping Willow 14" Crepe Myrtle	Not ordinance tree	
496	5706	Weeping Willow 12" Crepe Myrtle	Not ordinance tree	
497	5706	Weeping Willow 12" Water Oak	Private tree, will not be impacted	
498	5731	Weeping Willow 5" Water Oak	Ordinance tree	Root prune for lead
499	5711	Weeping Willow 4" Live Oak	Private tree, will not be impacted	
500	5703	Weeping Willow 7" Crepe Myrtle	Not ordinance tree	

S&B INFRASTRUCTURE LTD
Texas PE Firm Registration Number: F-1543

DESIGN ENGINEER NAME:
ADDRESS:
TELEPHONE: 713-845-5401
TX FIRM NUMBER: F-1582
SURVEYED BY: UNITED ENG. INC.
FB No. P-5673

C.N. Koehl
Urban Forestry, Inc.
210 Stone Bush Ct. - Katy, Texas 77493
281-391-0022 ckoehl@koehlurbanforestry.com
APPROVED: Chris N Koehl 01-21-2013

CITY OF HOUSTON
DEPARTMENT OF PUBLIC WORKS AND ENGINEERING

WATER LINE REPLACEMENT
IN FOREST PINES AREA

TREE PROTECTION PLAN
SHEET 10 OF 16

WBS NUMBER
S-000035-0130-4

DRAWING SCALE
1"=40'

CITY OF HOUSTON PM
JOHN MSIGWA, P.E.

SHEET NO. 127 OF 143

50281

DATE: Jan 21, 2013-3:34pm USERNAME: ewb FILENAME: 127-00 Forest Pines 09-10.dwg

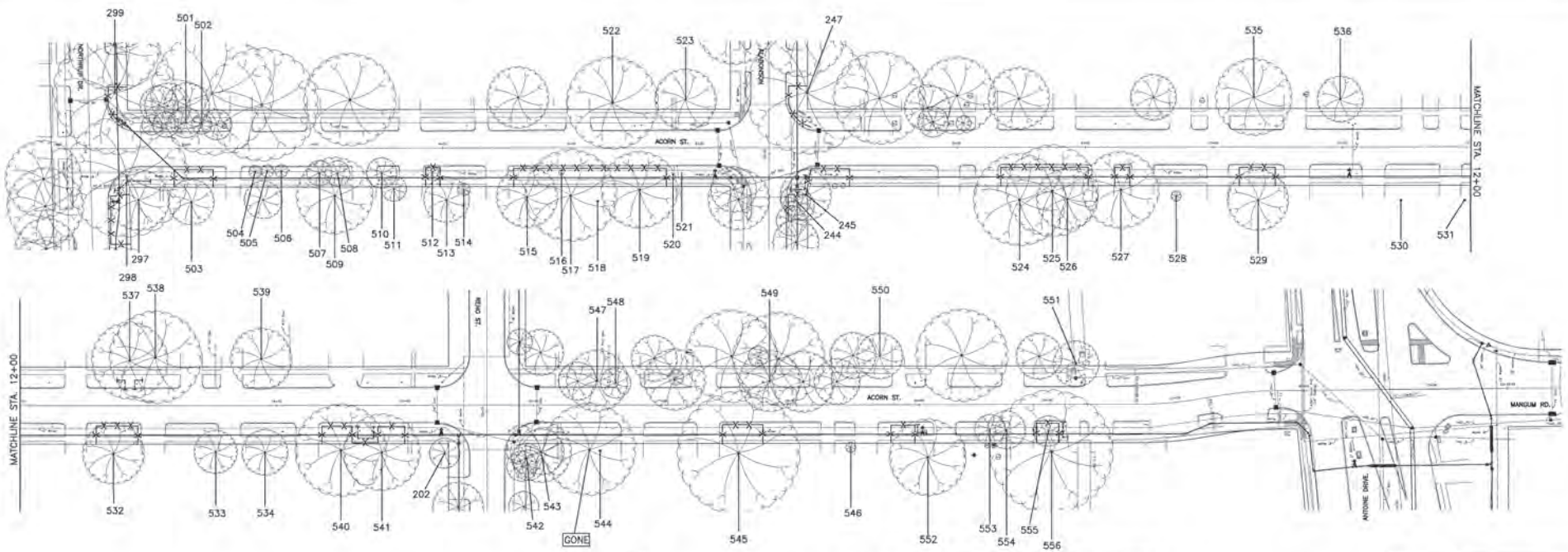

NOTE:
THIS TREE PROTECTION PLAN WAS DEVELOPED WITH INFORMATION PROVIDED BY DESIGN ENGINEER IN DRAWINGS DATED JANUARY 2013. THE PLAN CONSIDERS ALL FITTINGS, VERTICAL OFFSETS AND AREAS OF NECESSARY EXCAVATION. CHANGES MADE TO DESIGN MAY COMPROMISE THE TREE PROTECTION PLAN. REFER TO SPECIFICATIONS 01562 AND 02915. CONDITION OF EACH TREE IS BASED ON VISUAL EVALUATION AT TIME OF DESIGN. CONDITION AND STRUCTURAL INTEGRITY OF EACH TREE IS NOT GUARANTEED BY DESIGNER AT ANY POINT IN THE FUTURE, AS ENVIRONMENTAL AND MAINTENANCE INFLUENCES ON EACH TREE CAN NOT BE DETERMINED BY DESIGNER.

TREE PRESERVATION PLAN LEGEND

- TREE NUMBER/LOCATION
- TREE TO BE REMOVED
- TREE PROTECTION FENCE
- ROOT PRUNING TRENCH
- REPLACEMENT PLANTING SPECIES AND SIZE/TYPE

0 20 40 80

Tree No. Location	Description	Comments	Treatment
Trees on Acorn Street			
501 6026 Acorn	6" Crepe Myrtle	Not ordinance tree	
502 6026 Acorn	6" Crepe Myrtle	Not ordinance tree	
503 6027 Acorn	22" Magnolia	Private tree	Fence, Bore waterline
504 6023 Acorn	2" Crepe Myrtle	Not ordinance tree	
505 6023 Acorn	2" Crepe Myrtle	Not ordinance tree	
506 6023 Acorn	3" Crepe Myrtle	Not ordinance tree	
507 6019 Acorn	6" Crepe Myrtle	Not ordinance tree	
508 6019 Acorn	6" Crepe Myrtle	Not ordinance tree	
509 6019 Acorn	30" Arizona Ash	50% topped, Private, will not be impacted	
510 6019 Acorn	10" Crepe Myrtle	50% topped, Not ordinance tree	
511 6015 Acorn	4" Mulberry	Private tree, will not be impacted	
512 6015 Acorn	5" Live Oak	Ordinance tree	Fence, Bore waterline
513 6015 Acorn	14" Arizona Ash	Private tree, will not be impacted	
514 6015 Acorn	4" Live Oak	Private tree, will not be impacted	
515 6011 Acorn	20" Green Ash	Private tree	Fence, Bore waterline
516 6011 Acorn	3" Cedar	Not ordinance tree	
517 6011 Acorn	16" Water Oak	Private tree	Fence, Bore waterline
518 6002 Acorn	18" Pear	Private tree, will not be impacted	
519 6002 Acorn	24" Pine	Private tree	Fence, Bore waterline
520 6003 Acorn	2" Crepe Myrtle	Not ordinance tree	
521 6003 Acorn	2" Crepe Myrtle	Not ordinance tree	
522 6006 Acorn	28" Live Oak	Private tree, will not be impacted	
523 6002 Acorn	18" Magnolia	Private tree, will not be impacted	
524 5907 Acorn	30" Arizona Ash	Private tree	Fence, Bore waterline
525 5903 Acorn	25" Pine	Private tree	Hand dig tap & lead, Fence, Bore waterline
526 5903 Acorn	28" Arizona Ash	Private tree	Hand dig tap & lead, Fence, Bore waterline
527 5903 Acorn	25" Pine	Private tree	Fence, Bore waterline
528 5819 Acorn	3" Pear	Private tree, will not be impacted	
529 5815 Acorn	19" Pine	Private tree	Fence, Bore waterline
530 5807 Acorn	12" Water Oak	Private tree, will not be impacted	

Tree No. Location	Description	Comments	Treatment
Trees on Acorn Street			
531 5803 Acorn	24" Silver Maple	30% dieback, Private, will not be impacted	
532 5719 Acorn	20" Live Oak	Private tree	Fence, Bore waterline
533 5711 Acorn	10" Magnolia	Private tree, will not be impacted	
534 5711 Acorn	12" Pecan	Private tree, will not be impacted	
535 5814 Acorn	26" Live Oak	Private tree, will not be impacted	
536 5810 Acorn	13" Live Oak	Private tree, will not be impacted	
537 5718 Acorn	24" Magnolia	Private tree	Root prune for lead
538 5714 Acorn	26" Green Ash	Private tree	Root prune for lead
539 5710 Acorn	25" Arizona Ash	Private tree, will not be impacted	
540 5707 Acorn	30" Arizona Ash	Private tree	Root prune for tap & lead, Fence, Bore waterline
541 5703 Acorn	28" Pecan	Private tree	Root prune for tap & lead, Fence, Bore waterline
542 5619 Acorn	4" Crepe Myrtle	Private tree, will not be impacted	
543 5619 Acorn	6" Shumard Oak	Private tree, will not be impacted	
544 5619 Acorn	2" Live Oak	Private tree, will not be impacted	
545 5611 Acorn	40" Arizona Ash	Private tree	Fence, Bore waterline
546 5603 Acorn	3" Crepe Myrtle	Private tree, will not be impacted	
547 5618 Acorn	14" Crepe Myrtle	Not ordinance tree	
548 5618 Acorn	2" Sago	Not ordinance tree	
549 5606 Acorn	16" Crepe Myrtle	Not ordinance tree	
550 5602 Acorn	20" Pecan	Private tree, will not be impacted	
551 5518 Acorn	14" Sugarberry	Topped, Private tree, will not be impacted	
552 5519 Acorn	21" Water Oak	Private tree	Root prune for tap & lead, Fence, Bore waterline
553 5519 Acorn	8" Arborvitae	Not ordinance tree	
554 5515 Acorn	4" Crepe Myrtle	Not ordinance tree	
555 5515 Acorn	1' Sago	Not ordinance tree	
556 5515 Acorn	40" Arizona Ash	Private tree	Fence, Bore waterline

S&B INFRASTRUCTURE, LTD.
Texas PE Firm Registration Number: F-9167

DESIGN ENGINEER NAME:
ADDRESS:
TELEPHONE: 713-845-5401
TX FIRM NUMBER: F-1582
SURVEYED BY: UNITED ENG. INC.
FB No.: P-5673

C.N. Koehl
Urban Forestry, Inc.
210 Stone Bush Ct. • Katy, Texas 77493
281-391-8022 ckoehl@koehlurbanforestry.com
APPROVED: C.N. Koehl 01-21-2013

CITY OF HOUSTON
DEPARTMENT OF PUBLIC WORKS AND ENGINEERING

WATER LINE REPLACEMENT
IN FOREST PINES AREA

TREE PROTECTION PLAN
SHEET 11 OF 16

WBS NUMBER
S-000035-0130-4

DRAWING SCALE
1"=40'

CITY OF HOUSTON PM
JOHN MSIGWA, P.E.

SHEET NO. 128 OF 143

50281
HOUSTON TEXAS

DATE: Jan 25, 2013–2:03pm USERNAME: mkb FILENAME: 135-3B Forest Pines TP-11.dwg

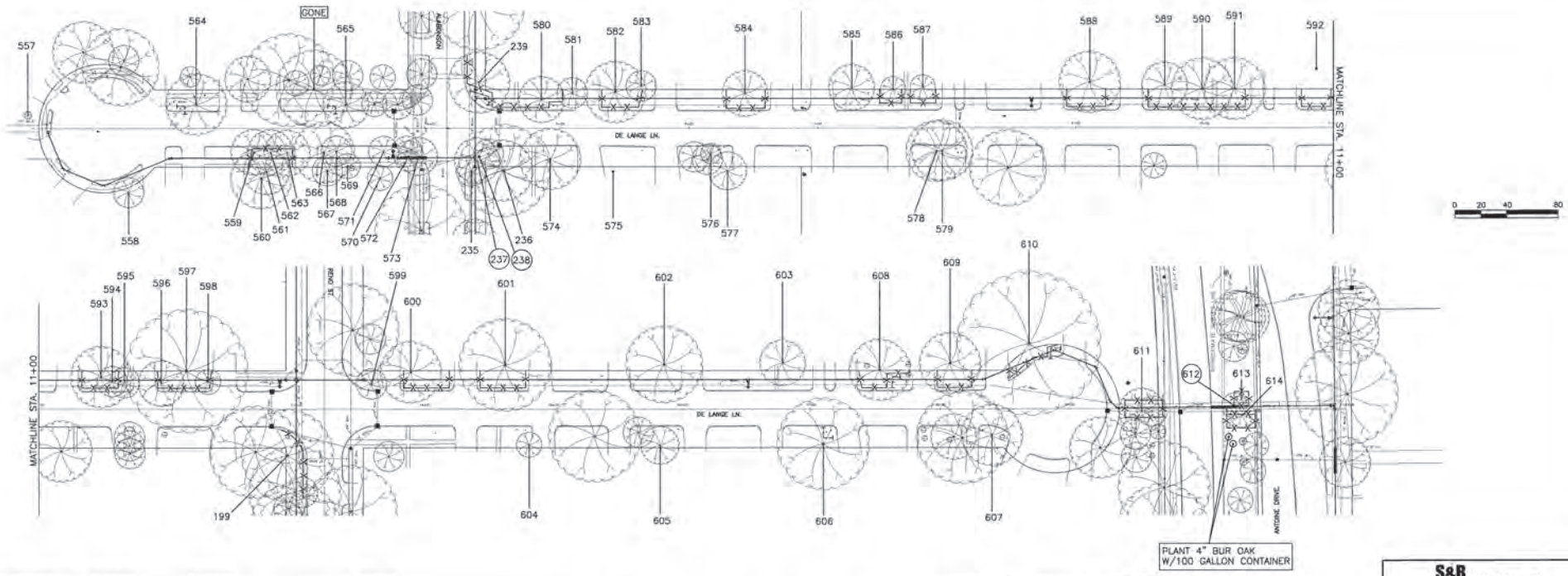

Tree No.	Location	Description	Comments	Treatment
Trees on De Lange Lane				
557	6022	De Lange	4" Crepe Myrtle	Private tree, will not be impacted
558	6015	De Lange	10" Tallow	Private tree, will not be impacted
559	6007	De Lange	14" Pear	Not ordinance tree
560	6007	De Lange	25" Pine	Private tree — Fence, Bore waterline
561	6007	De Lange	20" Pine	Private tree — Fence, Bore waterline
562	6007	De Lange	12" Pear	Not ordinance tree
563	6007	De Lange	18" Pear	Not ordinance tree
564	6010	De Lange	24" Live Oak	Ordinance tree — Root prune for lead
565	6002	De Lange	10" Water Oak	Ordinance tree — Root prune for lead
566	6003	De Lange	18" Pear	Not ordinance tree
567	6003	De Lange	4" Crepe Myrtle	Not ordinance tree
568	6003	De Lange	5" Crepe Myrtle	Not ordinance tree
569	6003	De Lange	4" Crepe Myrtle	Not ordinance tree
570	6003	De Lange	5" Red Maple	Private tree, will not be impacted
571	6003	De Lange	10" Crepe Myrtle	Not ordinance tree
572	6003	De Lange	10" Crepe Myrtle	Not ordinance tree
573	6003	De Lange	10" Crepe Myrtle	Not ordinance tree
574	5915	De Lange	14" American Sycamore	Not ordinance tree
575	5911	De Lange	28" Water Oak	Private tree, will not be impacted
576	5907	De Lange	4" Japanese Magnolia	Ordinance tree — Keep excavation for lead at least 5' from trunk
577	5903	De Lange	9" Magnolia	Private tree, will not be impacted
578	5815	De Lange	17" Crepe Myrtle	Not ordinance tree
579	5815	De Lange	18" Crepe Myrtle	Not ordinance tree
580	5914	De Lange	10" Water Oak	Ordinance tree — Fence, Bore waterline
581	5914	De Lange	1' Sago	Not ordinance tree
582	5910	De Lange	17" Magnolia	Ordinance tree — Fence, Bore waterline
583	5910	De Lange	10" Crepe Myrtle	Not ordinance tree
584	5902	De Lange	15" Magnolia	30% dieback, Ordinance tree — Fence, Bore waterline
585	5818	De Lange	18" Tallow	Private tree, will not be impacted
586	5814	De Lange	6" Trident Maple	Private tree — Fence, Bore waterline
587	5814	De Lange	6" Trident Maple	Private tree — Fence, Bore waterline
588	5806	De Lange	24" Pecan	Private tree — Fence, Bore waterline
589	5802	De Lange	12" Live Oak	Private tree — Fence, Bore waterline
590	5718	De Lange	26" Pecan	Ordinance tree — Fence, Bore waterline
591	5718	De Lange	22" Crepe Myrtle	Ordinance tree — Fence, Bore waterline
592	5714	De Lange	22" Arizona Ash	Private tree — Fence, Bore waterline

NOTE:
THIS TREE PROTECTION PLAN WAS DEVELOPED WITH INFORMATION PROVIDED BY DESIGN ENGINEER IN DRAWINGS DATED JANUARY 2013. THE PLAN CONSIDERS ALL FITTINGS, VERTICAL OFFSETS AND AREAS OF NECESSARY EXCAVATION. CHANGES MADE TO DESIGN MAY COMPROMISE THE TREE PROTECTION PLAN. REFER TO SPECIFICATIONS 01562 AND 02915. CONDITION OF EACH TREE IS BASED ON VISUAL EVALUATION AT TIME OF DESIGN. CONDITION AND STRUCTURAL INTEGRITY OF EACH TREE IS NOT GUARANTEED BY DESIGNER AT ANY POINT IN THE FUTURE, AS ENVIRONMENTAL AND MAINTENANCE INFLUENCES ON EACH TREE CAN NOT BE DETERMINED BY DESIGNER.

TREE PRESERVATION PLAN LEGEND

- TREE NUMBER/LOCATION
- TREE TO BE REMOVED
- TREE PROTECTION FENCE
- ROOT PRUNING TRENCH
- REPLACEMENT PLANTING SPECIES AND SIZE/TYPE

Tree No.	Location	Description	Comments	Treatment
Trees on De Lange Lane				
593	5710	De Lange	19" Water Oak	Ordinance tree — Fence, Bore waterline
594	5710	De Lange	5" Crepe Myrtle	Not ordinance tree
595	5710	De Lange	6" Crepe Myrtle	Not ordinance tree
596	5706	De Lange	14" Live Oak	Ordinance tree — Fence, Bore waterline
597	5706	De Lange	35" Water Oak	Ordinance tree — Fence, Bore waterline
598	5706	De Lange	4" Redbud	Not ordinance tree
599	5618	De Lange	3" Crepe Myrtle	Not ordinance tree
600	5618	De Lange	24" Live Oak	Ordinance tree — Fence, Bore waterline
601	5614	De Lange	32" Water Oak	Private tree — Fence, Bore waterline
602	5606	De Lange	18" Tallow	Private tree, will not be impacted
603	5518	De Lange	18" Tallow	Private tree, will not be impacted
604	5611	De Lange	9" Crepe Myrtle	50% topped, Not ordinance tree
605	5607	De Lange	9" American Sycamore	Not ordinance tree
606	5519	De Lange	18" Arizona Ash	Not ordinance tree — Root prune for lead
607	5507	De Lange	3' Sago	Not ordinance tree
608	5514	De Lange	22" Live Oak	Private tree — Root prune for tap & lead, Fence, Bore waterline
609	5510	De Lange	24" Sycamore	40% topped, Private tree — Fence, Bore waterline
610	5506	De Lange	27" Live Oak	Private tree — Hand dig bend, Root prune tap and lead, Fence, Bore waterline
611	5503	De Lange	24" Water Oak	Private tree — Fence, Bore waterline
612	Esplanade		8" Live Oak	Ordinance tree, remove for bends — Remove tree, provide 8" in replacement planting
613	Esplanade		2" Bur Oak	Ordinance tree — Fence
614	Esplanade		6" Live Oak	Ordinance tree — Root prune for waterline, Fence, Clearance prune

S&B INFRASTRUCTURE, LTD.
Texas PE Firm Registration Number: F-1582

DESIGN ENGINEER NAME:
ADDRESS:
TELEPHONE: 713-845-5401
TX FIRM NUMBER: F-1582
SURVEYED BY: UNITED ENG. INC.
FB No. P-5673

C.N. Koehl
Urban Forestry, Inc
210 Stone Bush Ct. • Katy, Texas 77493
281-391-0022 ckoehl@koehlurbanforestry.com
APPROVED: Cindy N. Koehl 01-21-2013

CITY OF HOUSTON
DEPARTMENT OF PUBLIC WORKS AND ENGINEERING

WATER LINE REPLACEMENT
IN FOREST PINES AREA

TREE PROTECTION PLAN
SHEET 12 OF 16

WBS NUMBER: S-000035-0130-4
DRAWING SCALE: 1"=40'
CITY OF HOUSTON PM: JOHN MSIGWA, P.E.
SHEET NO. 129 OF 143

50281 — REGISTERED — PROFESSIONAL — ENGINEER

DATE: Jan 21, 2013-2:56pm USERNAME: mwb FILENAME: 12th-08 Forest Pines 11-12.dwg

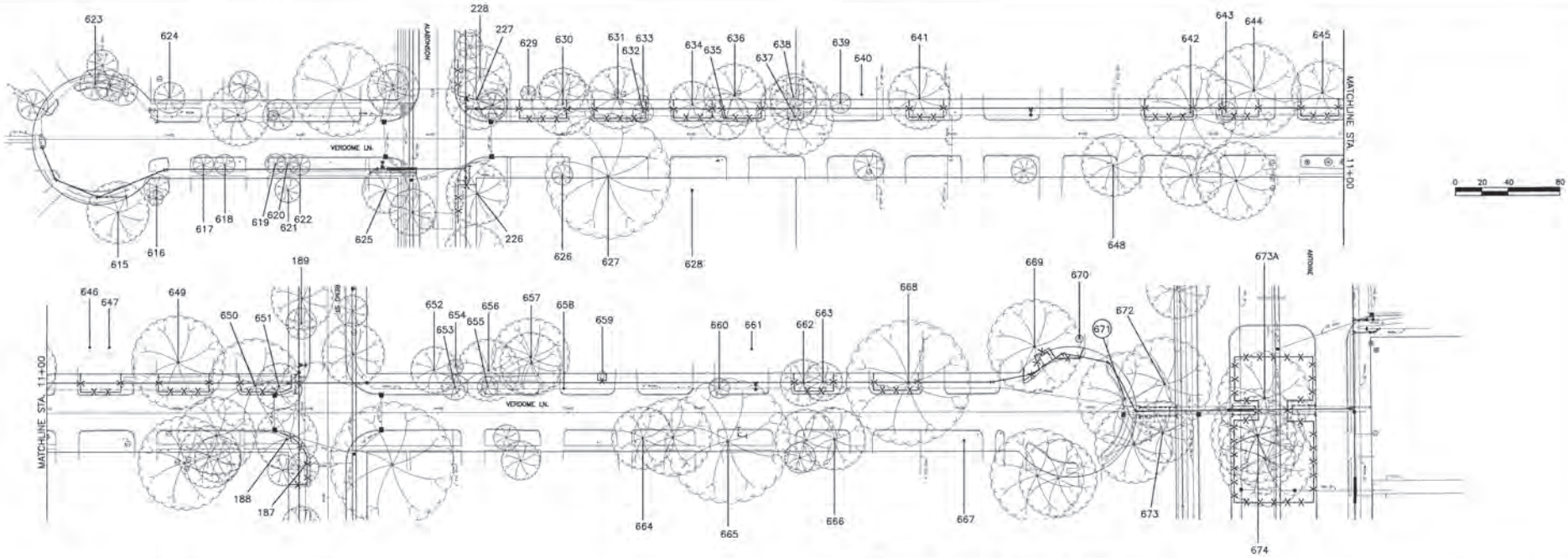

Tree No.	Location	Description	Comments	Treatment
Trees on Verdome Lane				
615	6015 Verdome	20" Water Oak	Private tree	Root prune for waterline
616	6015 Verdome	5" Crepe Myrtle	Private tree, will not be impacted	
617	6011 Verdome	4" Crepe Myrtle	Not ordinance tree	
618	6011 Verdome	4" Crepe Myrtle	Not ordinance tree	
619	6007 Verdome	4" Crepe Myrtle	Not ordinance tree	
620	6007 Verdome	4" Crepe Myrtle	Not ordinance tree	
621	6007 Verdome	12" Silver Maple	30% dieback, Private, will not be impacted	
622	6007 Verdome	4" Crepe Myrtle	Not ordinance tree	
623	6014 Verdome	2" Sago	Not ordinance tree	
624	6010 Verdome	14" Southern Red Oak	Private tree	Root prune for lead
625	6003 Verdome	23" Pecan	Private tree	Root prune for waterline
626	5911 Verdome	4" Pear	Not ordinance tree	
627	5911 Verdome	34" Live Oak	Ordinance tree	Hand dig lead
628	5907 Verdome	24" Arizona Ash	Private tree, will not be impacted	
629	5914 Verdome	3" Pecan	Private tree, will not be impacted	
630	5914 Verdome	24" Pine	Ordinance tree	Hand dig tap & lead, Fence, Bore waterline
631	5910 Verdome	26" White Ash	Private tree	Fence, Bore waterline
632	5906 Verdome	4" Crepe Myrtle	Not ordinance tree	
633	5906 Verdome	2" Crepe Myrtle	Not ordinance tree	
634	5906 Verdome	13" Live Oak	Ordinance tree	Fence, Bore waterline
635	5902 Verdome	14" Catalpa	Not ordinance tree	
636	5902 Verdome	18" Green Ash	Private tree	Fence, Bore waterline
637	5902 Verdome	10" American Elm	Not ordinance tree	
638	5902 Verdome	4" Sugarberry	Not ordinance tree	
639	5818 Verdome	4" Sycamore	Not ordinance tree	
640	5818 Verdome	5" Water Oak	Private tree, will not be impacted	
641	5814 Verdome	18" Shumard Oak	Private tree	Fence, Bore waterline
642	5802 Verdome	14" Magnolia	Private tree	Fence, Bore waterline
643	5718 Verdome	25" Live Oak	Ordinance tree	Fence, Bore waterline
644	5718 Verdome	32" Live Oak	Private tree	Fence, Bore waterline
645	5714 Verdome	16" Live Oak	Private tree	Fence, Bore waterline

NOTE:
THIS TREE PROTECTION PLAN WAS DEVELOPED WITH INFORMATION PROVIDED BY DESIGN ENGINEER IN DRAWINGS DATED JANUARY 2013. THE PLAN CONSIDERS ALL FITTINGS, VERTICAL OFFSETS AND AREAS OF NECESSARY EXCAVATION. CHANGES MADE TO DESIGN MAY COMPROMISE THE TREE PROTECTION PLAN. REFER TO SPECIFICATIONS 01562 AND 02915. CONDITION OF EACH TREE IS BASED ON VISUAL EVALUATION AT TIME OF DESIGN. CONDITION AND STRUCTURAL INTEGRITY OF EACH TREE IS NOT GUARANTEED BY DESIGNER AT ANY POINT IN THE FUTURE, AS ENVIRONMENTAL AND MAINTENANCE INFLUENCES ON EACH TREE CAN NOT BE DETERMINED BY DESIGNER.

Tree No.	Location	Description	Comments	Treatment
Trees on Verdome Lane				
646	5710 Verdome	35" Live Oak	Private tree	Fence, Bore waterline
647	5710 Verdome	24" Live Oak	Private tree	Fence, Bore waterline
648	5803 Verdome	15" Cedar	Not ordinance tree	
649	5706 Verdome	24" Water Oak	Private tree	Fence, Bore waterline
650	5702 Verdome	22" Water Oak	Ordinance tree	Hand dig tap & lead, Fence, Bore waterline
651	5702 Verdome	19" Water Oak	Ordinance tree	Root prune for tee, Fence, Bore waterline
652	5618 Verdome	10" Pine	Private tree, will not be impacted	
653	5614 Verdome	1" Sago	Not ordinance tree	
654	5614 Verdome	4" Shumard Oak	Private tree, will not be impacted	
655	5614 Verdome	1" Sago	Not ordinance tree	
656	5614 Verdome	3" Palm	Private tree, will not be impacted	
657	5610 Verdome	1" Live Oak	Private tree, will not be impacted	
658	5610 Verdome	1" Sago	Not ordinance tree	
659	5610 Verdome	2" Live Oak	Ordinance tree	Fence
660	5602 Verdome	1" Sago	Not ordinance tree	
661	5602 Verdome	30" Tallow	Private tree, will not be impacted	
662	5518 Verdome	13" Green Ash	Ordinance tree	Fence, Bore waterline
663	5518 Verdome	6" Green Ash	Ordinance tree	Fence, Bore waterline
664	5607 Verdome	22" Arizona Ash	Ordinance tree	Hand dig lead
665	5603 Verdome	30" Arizona Ash	Ordinance tree	Root prune for lead
666	5519 Verdome	15" Crepe Myrtle	Not ordinance tree	
667	5511 Verdome	1" Pecan	Not ordinance tree	
668	5514 Verdome	30" Water Oak	Ordinance tree	Hand dig tap & lead, Fence, Bore waterline
669	5506 Verdome	31" Tallow	Private tree	Root prune for bend, Fence, Bore waterline
670	5502 Verdome	4" Redbud	Private tree, will not be impacted	
671	5502 Verdome	32" Arizona Ash	Decay, Hazardous, Remove for bends	Remove tree, no replacement required
672	5502 Verdome	26" Arizona Ash	Private tree	Root prune for waterline
673	5503 Verdome	21" Arizona Ash	Private tree	Root prune for waterline
673A	Esplanade	36" Arizona Ash	Ordinance tree	Root prune for bend, Fence, Bore waterline
674	Esplanade	31" Live Oak	Ordinance tree	Root prune for bend, Fence, Bore waterline

TREE PRESERVATION PLAN LEGEND

- TREE NUMBER/LOCATION
- TREE TO BE REMOVED
- TREE PROTECTION FENCE
- ROOT PRUNING TRENCH
- REPLACEMENT PLANTING SPECIES AND SIZE/TYPE

S&B INFRASTRUCTURE, LTD.
Texas PE Firm Registration Number: F-1582
DESIGN ENGINEER NAME:
ADDRESS:
TELEPHONE: 713-845-5401
TX FIRM NUMBER: F-1582
SURVEYED BY: UNITED ENG. INC.
FB No. P-5673
C.N. Koehl
Urban Forestry, Inc.
210 Stone Bush Ct. • Katy, Texas 77493
281-391-0022 ckoehl@koehlurbanforestry.com
APPROVED: Chris N. Koehl 01-21-2013

CITY OF HOUSTON
DEPARTMENT OF PUBLIC WORKS AND ENGINEERING

WATER LINE REPLACEMENT
IN FOREST PINES AREA

TREE PROTECTION PLAN
SHEET 13 OF 16

WBS NUMBER
S-000035-0130-4

DRAWING SCALE
1"=40'

CITY OF HOUSTON PM
JOHN MSIGWA, P.E.

SHEET NO. 130 OF 143

50281

DATE: Jan 21, 2013-2:50pm USERNAME: mab FILENAME: 130-SB Forest Pines 16-13.dwg

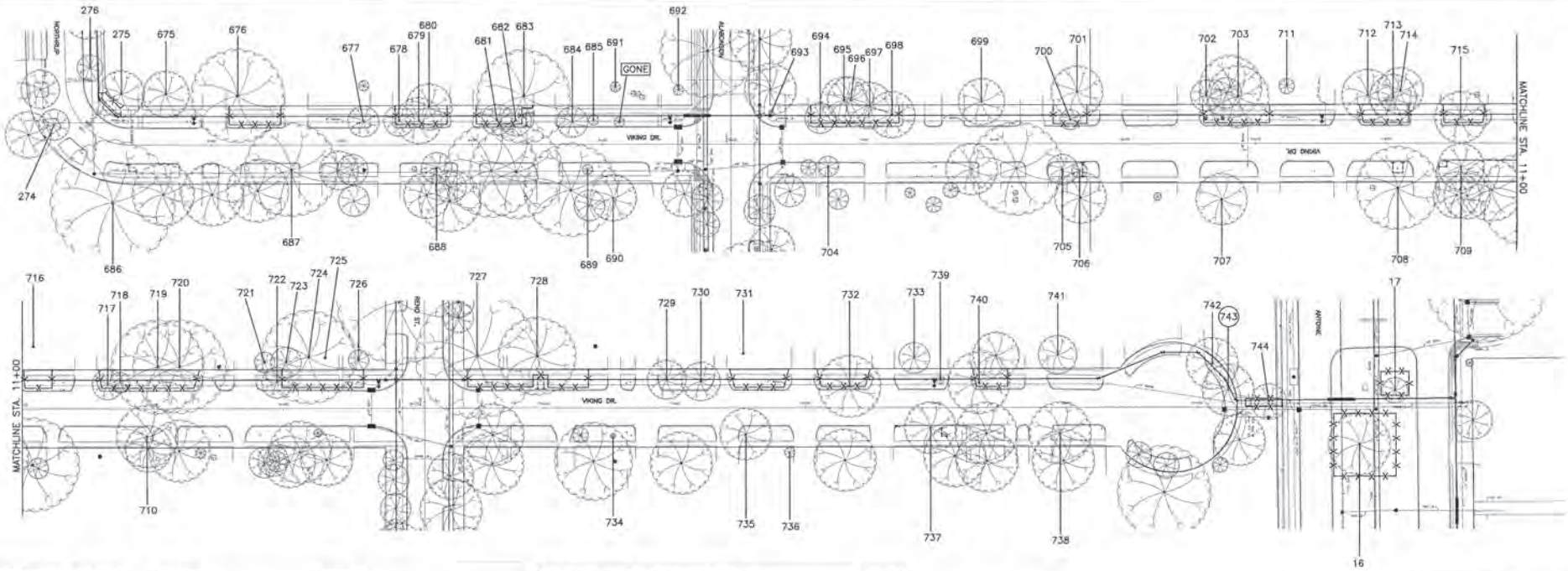

Tree No.	Location	Description	Comments	Treatment
Trees on Viking Drive				
675	6028 Viking	8" Live Oak	Private tree, will not be impacted	
676	6022 Viking	35" Water Oak	Private tree	Fence, Bore waterline
677	6014 Viking	4 Sago	Not ordinance tree	
678	6014 Viking	3 Sago	Not ordinance tree	
679	6014 Viking	20" Water Oak	Ordinance tree	Fence, Bore waterline
680	6014 Viking	28" Water Oak	Ordinance tree	Fence, Bore waterline
681	6010 Viking	5" Crepe Myrtle	Not ordinance tree	
682	6010 Viking	6" Crepe Myrtle	Not ordinance tree	
683	6008 Viking	32" Water Oak	Private tree	Root prune for tap & lead, Fence, Bore waterline
684	6008 Viking	5" Crepe Myrtle	Not ordinance tree	
685	6006 Viking	8" Crepe Myrtle	Not ordinance tree	
686	6031 Viking	40" Live Oak	Private tree	Root prune for lead
687	6019 Viking	25" Green Ash	Ordinance tree	Hand dig lead
688	6015 Viking	4" Crepe Myrtle	Not ordinance tree	
689	6007 Viking	1" Sago	Not ordinance tree	
690	6003 Viking	16" Pine	Private tree, will not be impacted	
691	6002 Viking	3" Crepe Myrtle	Private tree, will not be impacted	
692	6002 Viking	3" Crepe Myrtle	Private tree, will not be impacted	
693	5914 Viking	1" Crepe Myrtle	Not ordinance tree	
694	5914 Viking	8" Magnolia	70% dieback, Ordinance tree	Fence, Bore waterline
695	5914 Viking	14" Pine	Private tree	Fence, Bore waterline
696	5914 Viking	20" Pine	Private tree	Fence, Bore waterline
697	5910 Viking	16" Pine	Ordinance tree	Hand dig tap & lead, Fence, Bore waterline
698	5910 Viking	13" Pine	Ordinance tree	Fence, Bore waterline
699	5906 Viking	12" Catalpa	Private tree, will not be impacted	
700	5902 Viking	1" Crepe Myrtle	Not ordinance tree	
701	5902 Viking	22" Shumard Oak	Private tree	Fence, Bore waterline
702	5814 Viking	28" Live Oak	Private tree	Fence, Bore waterline
703	5814 Viking	30" Live Oak	Private tree	Hand dig tap & lead, Fence, Bore waterline
704	5915 Viking	4" Crepe Myrtle	Not ordinance tree	
705	5903 Viking	16" Water Oak	Ordinance tree	Root prune for lead
706	5903 Viking	4" Crepe Myrtle	Not ordinance tree	
707	5815 Viking	22" Tallow	Private tree, will not be impacted	

Tree No.	Location	Description	Comments	Treatment
Trees on Viking Drive				
708	5807 Viking	24" Arizona Ash	Private tree	Root prune for lead
709	5803 Viking	14" Pine	Ordinance tree	Root prune for lead
710	5715 Viking	15" Pine	Ordinance tree	Hand dig lead
711	5810 Viking	3" Loquat	Private tree, will not be impacted	
712	5806 Viking	16" Lacebark Elm	Private tree	Fence, Bore waterline
713	5800 Viking	25" Pine	Private tree	Fence, Bore waterline
714	5806 Viking	20" Pine	Private tree	Fence, Bore waterline
715	5802 Viking	16" Live Oak	Ordinance tree	Hand dig tap & lead, Fence, Bore waterline
716	5718 Viking	34" Arizona Ash	Private tree	Fence, Bore waterline
717	5714 Viking	4" Water Oak	Ordinance tree	Fence, Bore waterline
718	5714 Viking	6" Water Oak	Ordinance tree	Fence, Bore waterline
719	5710 Viking	32" Willow Oak	Private tree	Hand dig tap & lead, Fence, Bore waterline
720	5710 Viking	30" Lacebark Elm	Private tree	Fence, Bore waterline
721	5706 Viking	4" Cedar	Private tree, will not be impacted	
722	5706 Viking	3" Crepe Myrtle	Not ordinance tree	
723	5702 Viking	6" Live Oak	Private tree, will not be impacted	
724	5702 Viking	26" Pine	Private tree	Fence, Bore waterline
725	5702 Viking	26" Pine	Private tree	Fence, Bore waterline
726	5702 Viking	4" Magnolia	Private tree, will not be impacted	
727	5618 Viking	34" Water Oak	80% dieback, Private tree	Fence, Bore waterline
728	5618 Viking	36" Water Oak	Private tree	Root prune for tap & lead, Fence, Bore waterline
729	5610 Viking	2" Sago	Not ordinance tree	
730	5610 Viking	2" Sago	Not ordinance tree	
731	5606 Viking	40" Arizona Ash	Private tree	Fence, Bore waterline
732	5602 Viking	24" Arizona Ash	Ordinance tree	Fence, Bore waterline
733	5618 Viking	8" Green Ash	Private tree, will not be impacted	
734	5615 Viking	2" Hibiscus	Not ordinance tree	
735	5607 Viking	15" Arizona Ash	Not ordinance tree	
736	5603 Viking	3" Crepe Myrtle	Private tree, will not be impacted	
737	5619 Viking	20" Crepe Myrtle	Ordinance tree	Hand dig lead, and Root prune for eastern most lead
738	5611 Viking	22" Sycamore	Ordinance tree	Keep excavation for lead at least 20' from trunk
739	5614 Viking	3" Redbud	Not ordinance tree	
740	5614 Viking	22" Arizona Ash	Ordinance tree	Fence, Bore waterline
741	5610 Viking	10" Pecan	Private tree, will not be impacted	
742	5602 Viking	15" Oleander	Not ordinance tree	
743	5602 Viking	14" Oleander	Not ordinance tree, remove for bends	Remove tree, no replacement required
744	5502 Viking	14" Pecan	Private tree	Fence, Bore waterline

0 20 40 80

NOTE:
THIS TREE PROTECTION PLAN WAS DEVELOPED WITH INFORMATION PROVIDED BY DESIGN ENGINEER IN DRAWINGS DATED JANUARY 2013. THE PLAN CONSIDERS ALL FITTINGS, VERTICAL OFFSETS AND AREAS OF NECESSARY EXCAVATION. CHANGES MADE TO DESIGN MAY COMPROMISE THE TREE PROTECTION PLAN. REFER TO SPECIFICATIONS 01562 AND 02915. CONDITION OF EACH TREE IS BASED ON VISUAL EVALUATION AT TIME OF DESIGN. CONDITION AND STRUCTURAL INTEGRITY OF EACH TREE IS NOT GUARANTEED BY DESIGNER AT ANY POINT IN THE FUTURE, AS ENVIRONMENTAL AND MAINTENANCE INFLUENCES ON EACH TREE CAN NOT BE DETERMINED BY DESIGNER.

TREE PRESERVATION PLAN LEGEND

- TREE NUMBER/LOCATION
- TREE TO BE REMOVED
- TREE PROTECTION FENCE
- ROOT PRUNING TRENCH
- REPLACEMENT PLANTING SPECIES AND SIZE/TYPE

S&B INFRASTRUCTURE LTD.
Texas PE Firm Registration Number: F-5582

DESIGN ENGINEER NAME:
ADDRESS:
TELEPHONE: 713-845-5401
TX FIRM NUMBER: F-1582
SURVEYED BY: UNITED ENG, INC.
FB No. P-5673

C.N. Koehl
Urban Forestry, Inc.
210 Stone Bush Ct. • Katy, Texas 77493
281-391-0622 ckoehl@koehlurbanforestry.com
APPROVED: Cng n Koehl 01-21-2013

CITY OF HOUSTON
DEPARTMENT OF PUBLIC WORKS AND ENGINEERING

WATER LINE REPLACEMENT
IN FOREST PINES AREA

TREE PROTECTION PLAN
SHEET 14 OF 16

WBS NUMBER
S-000035-0130-4

DRAWING SCALE
1"=40'

CITY OF HOUSTON PM
JOHN MSIGWA, P.E.

SHEET NO. 131 OF 143

50281 REGISTERED ENGINEER

DATE: Jan 21, 2013-2:56pm USERNAME: mesh FILENAME: 131-TP Forest Pines TP-14.dwg

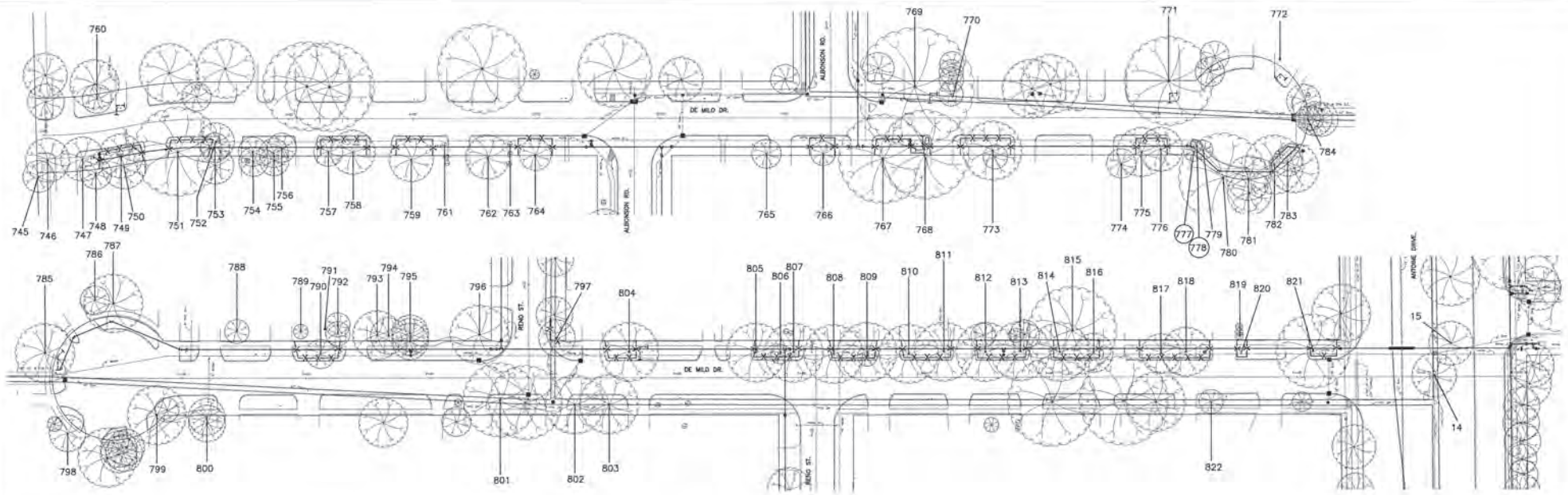

Tree No.	Location	Description	Comments	Treatment
Trees on De Milo Lane				
746	6107	De Milo 20" Tallow	Private tree, will not be impacted	
746	6107	De Milo 16" Arborvitae	Not ordinance tree	
747	6107	De Milo 16" Arborvitae	Not ordinance tree	
748	6107	De Milo 7" Pecan	Private tree, will not be impacted	
749	6107	De Milo 18" Pine	Ordinance tree	Hand dig tap & lead, Fence, Bore waterline
750	6107	De Milo 16" Pine	Private tree	Fence, Bore waterline
751	6103	De Milo 36" Arizona Ash	Ordinance tree	Fence, Bore waterline
752	6027	De Milo 11" Redbud	Not ordinance tree	
753	6027	De Milo 3" Bottlebrush	Not ordinance tree	
754	6027	De Milo 5" Crepe Myrtle	Not ordinance tree	
755	6027	De Milo 3" Crepe Myrtle	Not ordinance tree	
756	6027	De Milo 6" Bottlebrush	Not ordinance tree	
757	6023	De Milo 12" Magnolia	Ordinance tree	Fence, Bore waterline
758	6023	De Milo 18" Red Maple	Ordinance tree	Fence, Bore waterline
759	6019	De Milo 14" Water Oak	Private tree	Fence, Bore waterline
760	6106	De Milo 24" Pecan	Ordinance tree	Root prune for lead
761	6015	De Milo 6" Oleander	Not ordinance tree	
762	6015	De Milo 4" Cedar	Private tree, will not be impacted	
763	6015	De Milo 6" Oleander	Not ordinance tree	
764	6011	De Milo 12" Live Oak	Ordinance tree	Fence, Bore waterline
765	5919	De Milo 6" Crepe Myrtle	Not ordinance tree	
766	5919	De Milo 2" Chinese Pistache	Ordinance tree	Fence, Bore waterline
767	5915	De Milo 22" Arizona Ash	Private tree	Fence, Bore waterline
768	5911	De Milo 28" Tallow	Ordinance tree	Root prune for tap & lead, Fence, Bore waterline
769	5914	De Milo 45" Tallow	Ordinance tree	Root prune for lead
770	5910	De Milo 3" Crepe Myrtle	Not ordinance tree	
771	5902	De Milo 32" Water Oak	Ordinance tree	Root prune for lead
772	5806	De Milo 40" Water Oak	Private tree	Root prune for lead
773	5911	De Milo 25" Tallow	30% dieback, Ordinance tree	Fence, Bore waterline
774	5903	De Milo 10" Crepe Myrtle	Private tree, will not be impacted	
775	5903	De Milo 19" Crepe Myrtle	Not ordinance tree	
776	5903	De Milo 12" Water Oak	Ordinance tree	Fence, Bore waterline
777	5811	De Milo 5" Arborvitae	Not ordinance tree, remove for bends	Remove tree, no replacement required
778	5811	De Milo 2" Sago	Not ordinance tree, remove for bends	Remove tree, no replacement required
779	5811	De Milo 5" Arborvitae	Not ordinance tree	
780	5811	De Milo 36" Arizona Ash	50% topped, Private, will not be impacted	
781	5907	De Milo 18" Cedar	Not ordinance tree	

Tree No.	Location	Description	Comments	Treatment
Trees on De Milo Lane				
782	5607	De Milo 30' Palm	Not ordinance tree	
783	5603	De Milo 20" Pine	Ordinance tree	Fence, Bore waterline with pneumatic bullet
784	5802	De Milo 11" Crepe Myrtle	Private tree, will not be impacted	
785	5726	De Milo 25" Arizona Ash	Private tree	Root prune for waterline
786	5722	De Milo 8" Live Oak	Private tree, will not be impacted	
787	5722	De Milo 20" Crepe Myrtle	Private tree, will not be impacted	
788	5714	De Milo 4" Live Oak	Private tree, will not be impacted	
789	5710	De Milo 13" Magnolia	Private tree	Fence, Bore waterline
790	5710	De Milo 6" Crepe Myrtle	Not ordinance tree	
791	5710	De Milo 22" Pine	Private tree	Fence, Bore waterline
792	5710	De Milo 4" Ligustrum	Private tree, will not be impacted	
793	5706	De Milo 18" Arizona Ash	50% dieback, Private, will not be impacted	
794	5706	De Milo 2" Redbud	Private tree, will not be impacted	
795	5702	De Milo 12" Lacebark Elm	Private tree, will not be impacted	
796	5702	De Milo 22" American Elm	60% dieback, Private tree	
797	5610	De Milo 6" Pecan	Ordinance tree	Fence
798	5719	De Milo 6" Ligustrum	Private tree, will not be impacted	
799	5715	De Milo 22" Pine	Ordinance tree	Hand dig lead
800	5715	De Milo 4" Ligustrum	Not ordinance tree	
801	5615	De Milo 24" Arizona Ash	Ordinance tree	Hand dig lead
802	5611	De Milo 18" Tallow	Not ordinance tree	
803	5611	De Milo 22" Tallow	Ordinance tree	Hand dig lead
804	5610	De Milo 22" Sycamore	Ordinance tree	Root prune for tap & lead, Fence, Bore waterline
805	5602	De Milo 17" Pine	Ordinance tree	Fence, Bore waterline
806	5602	De Milo 2" Redbud	Not ordinance tree	
807	5602	De Milo 18" Lacebark Elm	Ordinance tree	Hand dig tree, Fence, Bore waterline
808	5526	De Milo 20" Lacebark Elm	Ordinance tree	Fence, Bore waterline
809	5526	De Milo 18" Lacebark Elm	Ordinance tree	Fence, Bore waterline
810	5522	De Milo 18" Lacebark Elm	Ordinance tree	Fence, Bore waterline
811	5522	De Milo 16" Lacebark Elm	Ordinance tree	Hand dig tap & lead, Fence, Bore waterline
812	5518	De Milo 18" Lacebark Elm	Ordinance tree	Fence, Bore waterline
813	5518	De Milo 21" Lacebark Elm	Ordinance tree	Hand dig fire hydrant, Fence, Bore waterline
814	5514	De Milo 14" Lacebark Elm	Ordinance tree	Hand dig tap & lead, Fence, Bore waterline
815	5514	De Milo 38" Water Oak	Private tree	Fence, Bore waterline
816	5510	De Milo 15" Arizona Ash	Not ordinance tree	
817	5510	De Milo 15" Lacebark Elm	Ordinance tree	Hand dig tap & lead, Fence, Bore waterline
818	5506	De Milo 20" Lacebark Elm	Ordinance tree	Fence, Bore waterline
819	5502	De Milo 2" Leyland Cypress	Private tree, will not be impacted	
820	5502	De Milo 2" Shumard Oak	Ordinance tree	Fence, Bore waterline
821	5502	De Milo 25" American Elm	40% dieback, Ordinance tree	Fence, Bore waterline
822	5507	De Milo 6" Prunus	Not ordinance tree	

0 20 40 80

NOTE:
THIS TREE PROTECTION PLAN WAS DEVELOPED WITH INFORMATION PROVIDED BY DESIGN ENGINEER IN DRAWINGS DATED JANUARY 2013. THE PLAN CONSIDERS ALL FITTINGS, VERTICAL OFFSETS AND AREAS OF NECESSARY EXCAVATION. CHANGES MADE TO DESIGN MAY COMPROMISE THE TREE PROTECTION PLAN. REFER TO SPECIFICATIONS 01562 AND 02915. CONDITION OF EACH TREE IS BASED ON VISUAL EVALUATION AT TIME OF DESIGN. CONDITION AND STRUCTURAL INTEGRITY OF EACH TREE IS NOT GUARANTEED BY DESIGNER AT ANY POINT IN THE FUTURE, AS ENVIRONMENTAL AND MAINTENANCE INFLUENCES ON EACH TREE CAN NOT BE DETERMINED BY DESIGNER.

TREE PRESERVATION PLAN LEGEND

- 1 — TREE NUMBER/LOCATION
- (1) — TREE TO BE REMOVED
- -X-X- — TREE PROTECTION FENCE
- ——(— ROOT PRUNING TRENCH
- ⊙ — REPLACEMENT PLANTING SPECIES AND SIZE/TYPE

S&B INFRASTRUCTURE, LTD.
Texas PE Firm Registration Number: F-5281

DESIGN ENGINEER NAME:
ADDRESS:
TELEPHONE: 713-845-5401
TX FIRM NUMBER: F-1582
SURVEYED BY: UNITED ENG. INC.
FB No. P-5673

C.N. Koehl
Urban Forestry, Inc.
210 Stone Bush Ct. • Katy, Texas 77493
281-391-0002 ckoehl@koehlurbanforestry.com
APPROVED: Chip N. Koehl 01-23-2013

CITY OF HOUSTON
DEPARTMENT OF PUBLIC WORKS AND ENGINEERING

WATER LINE REPLACEMENT
IN FOREST PINES AREA

TREE PROTECTION PLAN
SHEET 15 OF 16

WBS NUMBER
S-000035-0130-4

DRAWING SCALE
1"=40'

CITY OF HOUSTON PM
JOHN MSIGWA, P.E.

50281

SHEET NO. 132 OF 143

DATE: Jan 25, 2013-2:50pm USERNAME: rwb FILENAME: 132-SP Forest Pines 15-15.dwg

Tree Removal List

Tree No.	Location	Description	Replacement requirement
44	5430 De Lange	4" Crepe Myrtle	0
45	5430 De Lange	4" Crepe Myrtle	0
46	5430 De Lange	6" Crepe Myrtle	0
237	5915 De Lange	12" Crepe Myrtle	0
238	5915 De Lange	3" Prickly Pear	0
612	Esplanade	8" Live Oak	8
671	5602 Vendome	32" Anziera Ash	0
743	5602 Viking	14" Oleander	0
777	5811 De Milo	5" Arborvitae	0
778	5811 De Milo	2" Salgo	0
		TOTAL REPLACEMENT INCHES REQUIRE	8

Tree Replacement List

Quantity	Caliper Size	Species	Container/Tree Spade size
2	4	Bur Oak (*Quercus macrocarpa*)	60" spade or cured basket
		TOTAL REPLACEMENT INCHES INCLUDED IN PLAN	8

NOTE: Tree replacement locations shown on plans must be coordinated with adjacent property owner and City of Houston Urban Forestry prior to excavation for planting. Coordination shall be completed by construction contractor's Certified Arborist. Trees to be maintained and watered for 2 years following planting per standard spec 02915. Timing of planting may be delayed in periods of drought with mandatory water restrictions in place–timing to be coordinated with City of Houston Urban Forestry. Trees in esplande groupings to be planted in common bed with 4" of hardwood mulch between trees.

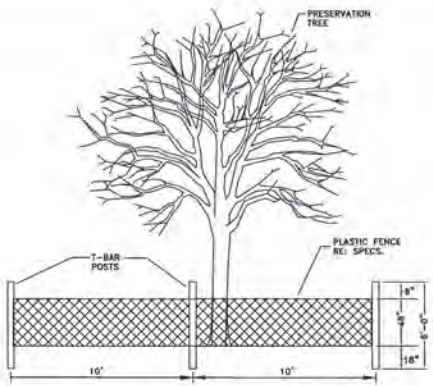

TREE PROTECTION FENCING DETAIL A
NOT TO SCALE

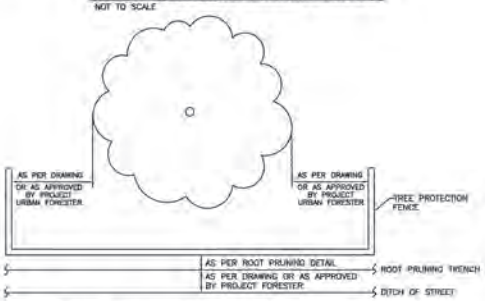

TREE PROTECTION FENCING DETAIL B
NOT TO SCALE

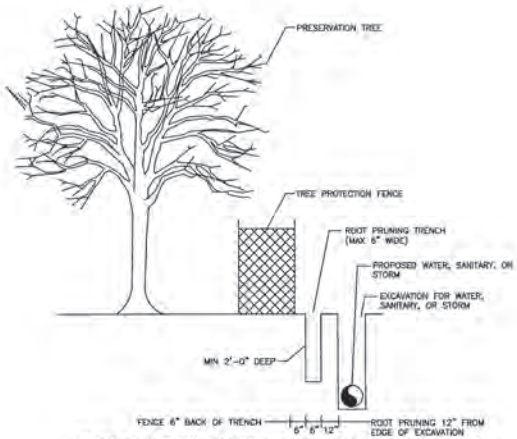

ROOT PRUNE FOR WATER, SANITARY, OR STORM LINE
NOT TO SCALE

S&B INFRASTRUCTURE LTD.

DESIGN ENGINEER NAME:
ADDRESS:
TELEPHONE: 713-845-5401
TX FIRM NUMBER: F-1582
SURVEYED BY: UNITED ENG. INC.
FB No. P-5673

C.N. Koehl
Urban Forestry, Inc.
210 Stone Bush Ct. • Katy, Texas 77493
281-391-0022 ckoehl@cnkoehlurbanforestry.com
APPROVED: C.N. Koehl 01-23-2013

CITY OF HOUSTON
DEPARTMENT OF PUBLIC WORKS AND ENGINEERING

WATER LINE REPLACEMENT
IN FOREST PINES AREA

TREE PROTECTION PLAN
SHEET 16 OF 16

WBS NUMBER
S-000035-0130-4

DRAWING SCALE
1"=40'

CITY OF HOUSTON PM
JOHN MSIGWA, P.E.

SHEET NO. 133 OF 143

50281

DATE: Jan 21, 2013-2:16pm USERNAME: rwall R:\BASIC 133-09 Forest Pines 8in-16.dwg