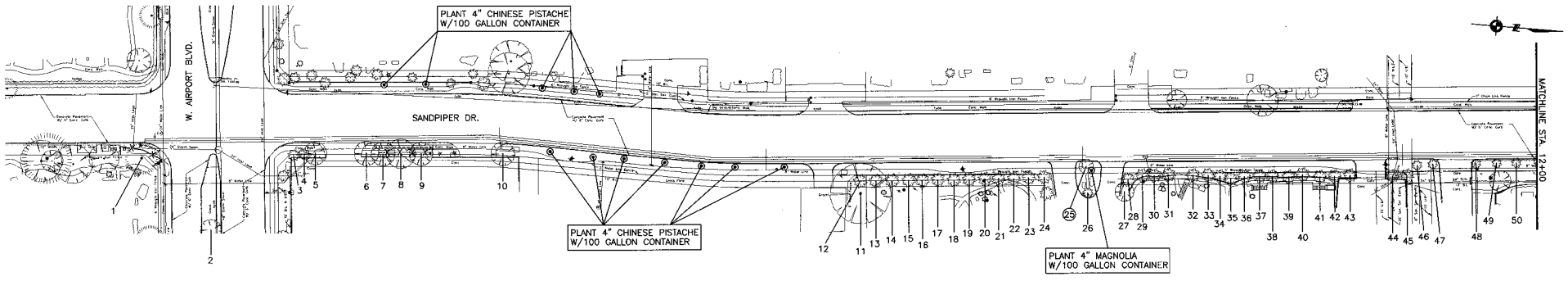

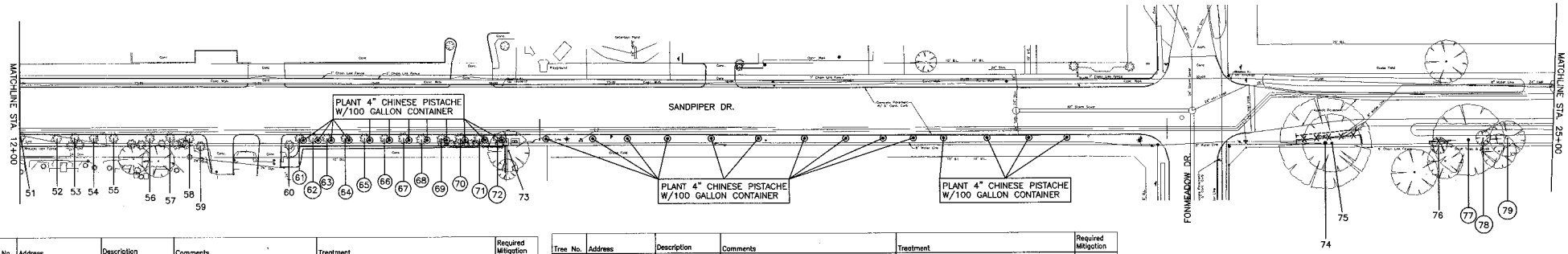

Tree No.	Address	Description	Comments	Treatment	Required Mitigation
Trees on Sandpiper Drive					
1	1240 Sandpiper	16" Pine	Ordinance tree, thin canopy	Root prune for street cut, Fence	
2	Esplanade of Airport	5" Bur Oak	Ordinance tree, will not be impacted		
3	6403 W Airport	3" Bradford Pear	Not ordinance tree		
4	6403 W Airport	3" Bradford Pear	Not ordinance tree		
5	6403 W Airport	8" Bradford Pear	Not ordinance tree	Clearance prune	
6	6403 W Airport	8" Bradford Pear	Not ordinance tree	Clearance prune	
7	6403 W Airport	9" Baldcypress	Ordinance tree	Root prune for street, Fence, Clearance prune	
8	6403 W Airport	9" Baldcypress	Ordinance tree	Root prune for street, Fence, Clearance prune	
9	6403 W Airport	9" Baldcypress	Ordinance tree	Root prune for street, Fence, Clearance prune	
10	6403 W Airport	8" Bradford Pear	Not ordinance tree	Clearance prune	
11	12380 Sandpiper	16" Arizona Ash	Private tree, will not be impacted		
12	12380 Sandpiper	9" Crepe Myrtle	Not ordinance tree		
13	12380 Sandpiper	9" Crepe Myrtle	Not ordinance tree		
14	12380 Sandpiper	8" Crepe Myrtle	Not ordinance tree		
15	12380 Sandpiper	9" Crepe Myrtle	Not ordinance tree		
16	12380 Sandpiper	7" Crepe Myrtle	Not ordinance tree		
17	12380 Sandpiper	9" Crepe Myrtle	Not ordinance tree		
18	12380 Sandpiper	10" Crepe Myrtle	Not ordinance tree		
19	12380 Sandpiper	9" Crepe Myrtle	Not ordinance tree		
20	12380 Sandpiper	9" Crepe Myrtle	Not ordinance tree		
21	12380 Sandpiper	8" Crepe Myrtle	Not ordinance tree		
22	12380 Sandpiper	9" Crepe Myrtle	Not ordinance tree		
23	12380 Sandpiper	9" Crepe Myrtle	Not ordinance tree		
24	12380 Sandpiper	9" Crepe Myrtle	Not ordinance tree		
25	12380 Sandpiper	6" Magnolia	Remove for street, 80% dieback	Remove tree, No replacement required due to condition	0
26	12380 Sandpiper	12" Crepe Myrtle	Private tree, will not be impacted		
27	12380 Sandpiper	11" Crepe Myrtle	Private tree, will not be impacted		
28	12380 Sandpiper	11" Crepe Myrtle	Private tree, will not be impacted		
29	12380 Sandpiper	11" Crepe Myrtle	Private tree, will not be impacted		
30	12380 Sandpiper	11" Crepe Myrtle	Private tree, will not be impacted		
31	12380 Sandpiper	11" Crepe Myrtle	Private tree, will not be impacted		
32	12380 Sandpiper	11" Crepe Myrtle	Private tree, will not be impacted		
33	12380 Sandpiper	11" Crepe Myrtle	Private tree, will not be impacted		
34	12380 Sandpiper	11" Crepe Myrtle	Private tree, will not be impacted		
35	12380 Sandpiper	11" Crepe Myrtle	Private tree, will not be impacted		
36	12380 Sandpiper	11" Crepe Myrtle	Private tree, will not be impacted		
37	12380 Sandpiper	11" Crepe Myrtle	Private tree, will not be impacted		
38	12380 Sandpiper	11" Crepe Myrtle	Private tree, will not be impacted		
39	12380 Sandpiper	11" Crepe Myrtle	Private tree, will not be impacted		
40	12380 Sandpiper	11" Crepe Myrtle	Private tree, will not be impacted		
41	12380 Sandpiper	11" Crepe Myrtle	Private tree, will not be impacted		
42	12380 Sandpiper	11" Crepe Myrtle	Private tree, will not be impacted		
43	12380 Sandpiper	11" Crepe Myrtle	Private tree, will not be impacted		
44	12380 Sandpiper	11" Crepe Myrtle	Private tree, will not be impacted		
45	12380 Sandpiper	11" Crepe Myrtle	Private tree, will not be impacted		
46	12500 Sandpiper	7" Crepe Myrtle	Private tree	Clearance prune	
47	12500 Sandpiper	7" Crepe Myrtle	Private tree	Clearance prune	
48	12500 Sandpiper	8" Crepe Myrtle	Private tree	Clearance prune	
49	12500 Sandpiper	8" Crepe Myrtle	Private tree	Clearance prune	
50	12500 Sandpiper	8" Crepe Myrtle	Private tree	Clearance prune	
51	12500 Sandpiper	8" Crepe Myrtle	Private tree	Clearance prune	

Tree No.	Address	Description	Comments	Treatment	Required Mitigation
Trees on Sandpiper Drive					
52	12500 Sandpiper	8" Crepe Myrtle	Private tree	Clearance prune	
53	12500 Sandpiper	8" Crepe Myrtle	Private tree	Clearance prune	
54	12500 Sandpiper	8" Crepe Myrtle	Private tree	Clearance prune	
55	12500 Sandpiper	8" Crepe Myrtle	Private tree	Clearance prune	
56	12500 Sandpiper	8" Crepe Myrtle	Private tree	Clearance prune	
57	12500 Sandpiper	8" Crepe Myrtle	Private tree	Clearance prune	
58	12500 Sandpiper	8" Crepe Myrtle	Private tree	Clearance prune	
59	12500 Sandpiper	8" Crepe Myrtle	Private tree	Clearance prune	
60	12500 Sandpiper	7" Crepe Myrtle	Not ordinance tree		
61	12500 Sandpiper	6" Crepe Myrtle	Not ordinance tree, remove for stabilization	Remove tree, no replacement required	0
62	12500 Sandpiper	6" Crepe Myrtle	Not ordinance tree, remove for stabilization	Remove tree, no replacement required	0
63	12500 Sandpiper	6" Crepe Myrtle	Not ordinance tree, remove for stabilization	Remove tree, no replacement required	0
64	12500 Sandpiper	6" Crepe Myrtle	Not ordinance tree, remove for stabilization	Remove tree, no replacement required	0
65	12500 Sandpiper	6" Crepe Myrtle	Not ordinance tree, remove for stabilization	Remove tree, no replacement required	0
66	12500 Sandpiper	6" Crepe Myrtle	Not ordinance tree, remove for stabilization	Remove tree, no replacement required	0
67	12500 Sandpiper	6" Crepe Myrtle	Not ordinance tree, remove for stabilization	Remove tree, no replacement required	0
68	12500 Sandpiper	6" Crepe Myrtle	Not ordinance tree, remove for stabilization	Remove tree, no replacement required	0
69	12500 Sandpiper	6" Crepe Myrtle	Not ordinance tree, remove for stabilization	Remove tree, no replacement required	0
70	12500 Sandpiper	8" Crepe Myrtle	Not ordinance tree, remove for stabilization	Remove tree, no replacement required	0
71	12500 Sandpiper	6" Crepe Myrtle	Not ordinance tree, remove for stabilization	Remove tree, no replacement required	0
72	12500 Sandpiper	6" Crepe Myrtle	Not ordinance tree, remove for stabilization	Remove tree, no replacement required	0
73	Vacant lot	12" Sugarberry	Private tree	Clearance prune	
Trees on Canemont Street					
74	11614 Canemont	21" Tallow	Ordinance tree	Root prune for street, Fence, Clearance prune	
75	11614 Canemont	10" Ligustrum	Not ordinance tree	Clearance prune	
76	11614 Canemont	4" Live Oak	Ordinance tree	Fence, Clearance prune	
77	11614 Canemont	13" Tallow	Not ordinance tree, Remove for ditch grading	Remove tree, no replacement required	0
78	11614 Canemont	4" Sugarberry	Not ordinance tree, Remove for ditch grading	Remove tree, no replacement required	0
79	11614 Canemont	11" Tallow	Not ordinance tree, Remove for ditch grading	Remove tree, no replacement required	0

TREE PRESERVATION PLAN LEGEND

- TREE NUMBER/LOCATION
- TREES TO BE REMOVED
- TREE PROTECTION FENCE
- ROOT PRUNING TRENCH
- REPLACEMENT TREE

NOTE:
THIS TREE PROTECTION PLAN WAS DEVELOPED WITH INFORMATION PROVIDED BY DESIGN ENGINEER IN DRAWINGS DATED AUGUST 2010. THE PLAN CONSIDERS ALL FITTINGS, VERTICAL OFFSETS AND AREAS OF NECESSARY EXCAVATION. CHANGES MADE TO DESIGN MAY COMPROMISE THE TREE PROTECTION PLAN. REFER SPECIFICATIONS: 01562 AND 02915. CONDITION OF EACH TREE IS BASED ON VISUAL EVALUATION AT TIME OF DESIGN. CONDITION AND STRUCTURAL INTEGRITY OF EACH TREE IS NOT GUARANTEED BY DESIGNER AT ANY POINT IN THE FUTURE, AS ENVIRONMENTAL AND MAINTENANCE INFLUENCES ON EACH TREE CAN NOT BE DETERMINED BY DESIGNER.

0 20 40 80

SWTP
Surface Water Transmission Program

KSN
Landscape Architecture
Planning
A DBE & SBE Firm
2500 Bolivar Drive Houston, TX 77006

Texas American Engineering
TBPE Firm No. F-3000
TBPLS Firm No. 10194300

SURVEYED BY: MARTINEZ, GUY & MAYSIK, INC.
C.O.H. Field Book 9-

PREPARED BY:
C.N. Koehl
Urban Forestry, Inc.
3237 Canvasback Street • Katy, Texas 77493
281-391-0303 cnkoehl@urbanforestry.net
Prepared Craig N. Koehl 2/3/2011

CITY OF HOUSTON
DEPARTMENT OF PUBLIC WORKS AND ENGINEERING

SWTP CONTRACT 74A-2

TREE PROTECTION PLAN
SHEET 1 OF 6

WBS NO.
S-000900-0110-4

DRAWING SCALE
1"=40'

CITY OF HOUSTON PM
ARTHUR C. MORRIS, P.E.

SHEET NO. 81 OF 108

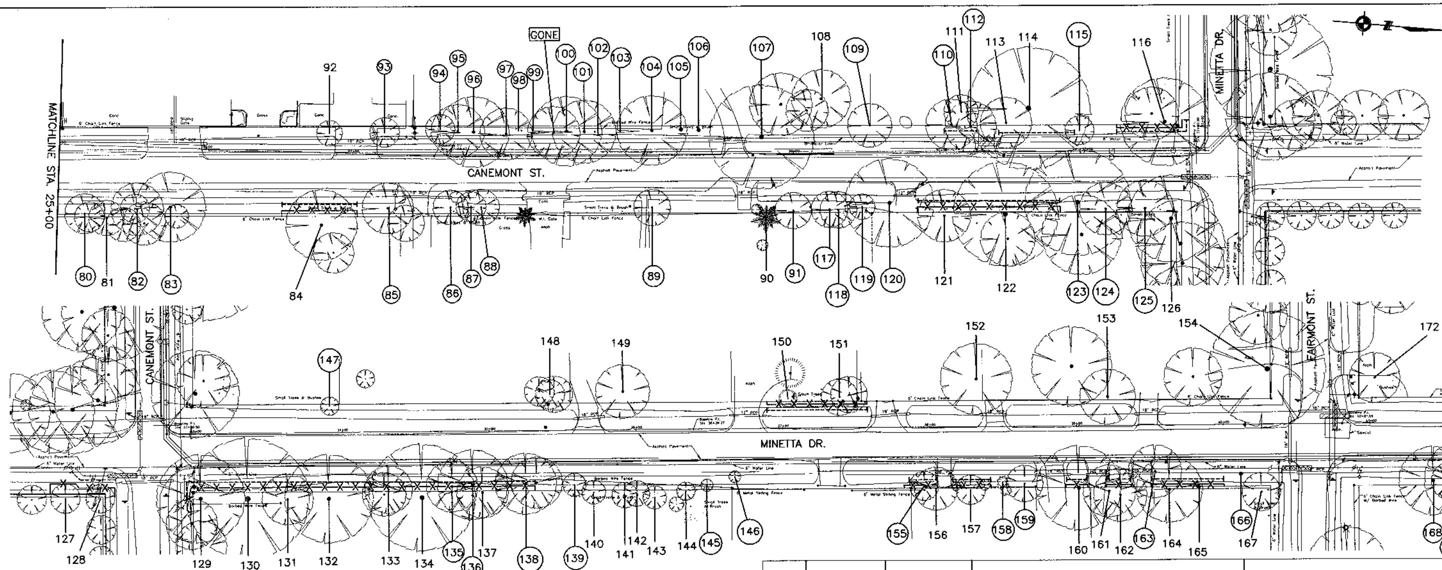

TREE PRESERVATION PLAN LEGEND

- TREE NUMBER/LOCATION
- TREES TO BE REMOVED
- TREE PROTECTION FENCE
- ROOT PRUNING TRENCH
- REPLACEMENT TREE

NOTE:
THIS TREE PROTECTION PLAN WAS DEVELOPED WITH INFORMATION PROVIDED BY DESIGN ENGINEER IN DRAWINGS DATED AUGUST 2010. THE PLAN CONSIDERS ALL FITTINGS, VERTICAL OFFSETS AND AREAS OF NECESSARY EXCAVATION. CHANGES MADE TO DESIGN MAY COMPROMISE THE TREE PROTECTION PLAN. REFER SPECIFICATIONS 01562 AND 02915. CONDITION OF EACH TREE IS BASED ON VISUAL EVALUATION AT TIME OF DESIGN. CONDITION AND STRUCTURAL INTEGRITY OF EACH TREE IS NOT GUARANTEED BY DESIGNER AT ANY POINT IN THE FUTURE, AS ENVIRONMENTAL AND MAINTENANCE INFLUENCES ON EACH TREE CAN NOT BE DETERMINED BY DESIGNER.

Tree No.	Address	Description	Comments	Treatment	Required Mitigation
Trees on Canemont Street					
80	11614 Canemont	12" Sugarberry	Not ordinance tree, Remove for ditch grading	Remove tree, no replacement required	0
81	11614 Canemont	9" Ligustrum	Private tree	Clearance prune	
82	11614 Canemont	10" Sugarberry	Dead, Not ordinance tree	Remove tree, no replacement required	0
83	11614 Canemont	20" American Elm	Ordinance tree, Remove for ditch grading	Remove tree, Provide 20" in replacement	20
84	11614 Canemont	20" American Elm	Private tree	Root prune for ditch grading, Fence, Clearance prune	
85	11614 Canemont	16" Live Oak	Ordinance tree, Remove for ditch grading	Remove tree, Provide 16" in replacement	16
86	11614 Canemont	14" Tallow	Not ordinance tree, Remove for ditch grading	Remove tree, no replacement required	0
87	11614 Canemont	10" Sugarberry	Not ordinance tree, Remove for ditch grading	Remove tree, no replacement required	0
88	11614 Canemont	13" Sugarberry	Not ordinance tree, Remove for ditch grading	Remove tree, no replacement required	0
89	11614 Canemont	6" Sugarberry	Not ordinance tree, Remove for ditch grading	Remove tree, no replacement required	0
90	11614 Canemont	6' Palm	Private tree, will not be impacted		
91	11614 Canemont	10" Pine	Ordinance tree, Remove for ditch grading	Remove tree, provide 10" in replacement	10
92	11535 Canemont	5" Ligustrum	Not ordinance tree		
93	11535 Canemont	9" Live Oak	Ordinance tree, Remove for ditch grading	Remove tree, provide 9" in replacement	9
94	11615 Canemont	10" Tallow	Not ordinance tree, Remove for ditch grading	Remove tree, no replacement required	0
95	11615 Canemont	20" Cedar	Ordinance tree, Remove for ditch grading	Remove tree, Provide 20" in replacement	20
96	11615 Canemont	16" Live Oak	Ordinance tree, Remove for ditch grading	Remove tree, Provide 16" in replacement	16
97	11615 Canemont	14" American Elm	Not ordinance tree, Remove for ditch grading	Remove tree, no replacement required	0
98	11615 Canemont	11" Tallow	Not ordinance tree, Remove for ditch grading	Remove tree, no replacement required	0
99	11615 Canemont	10" Cedar	Not ordinance tree, Remove for ditch grading	Remove tree, no replacement required	0
100	11615 Canemont	13" Cedar	Not ordinance tree, Remove for ditch grading	Remove tree, no replacement required	0
101	11615 Canemont	12" Tallow	Dead, Not ordinance tree	Remove tree, no replacement required	0
102	11615 Canemont	13" Tallow	Not ordinance tree, Remove for ditch grading	Remove tree, no replacement required	0
103	11615 Canemont	12" Sugarberry	Not ordinance tree, Remove for ditch grading	Remove tree, no replacement required	0
104	11615 Canemont	25" Live Oak	Ordinance tree, Remove for ditch grading	Remove tree, Provide 25" in replacement	25
105	11615 Canemont	11" Sugarberry	Not ordinance tree, Remove for ditch grading	Remove tree, no replacement required	0
106	11615 Canemont	10" Tallow	Not ordinance tree, Remove for ditch grading	Remove tree, no replacement required	0
107	11615 Canemont	19" Tallow	Not ordinance tree, Remove for ditch grading	Remove tree, no replacement required	0
108	11615 Canemont	19" Sugarberry	Private tree, will not be impacted		
109	11615 Canemont	15" Cedar	Not ordinance tree, Remove for ditch grading	Remove tree, no replacement required	0
110	14444 Minetta	12" Cedar	Not ordinance tree, Remove for ditch grading	Remove tree, no replacement required	0
111	14444 Minetta	12" Cedar	Private tree	Root prune for ditch grading	
112	14444 Minetta	14" Cedar	Not ordinance tree, Remove for ditch grading	Remove tree, no replacement required	0
113	14444 Minetta	18" Cedar	Private tree	Root prune for ditch grading	
114	14444 Minetta	27" Live Oak	Private tree	Root prune for ditch grading	
115	14444 Minetta	11" Chinaberry	Not ordinance tree, Remove for ditch grading	Remove tree, no replacement required	0
116	14444 Minetta	29" Live Oak	Private tree	Fence, Root prune for ditch grading, Clearance prune, Root stimulate	
117	11614 Canemont	10" Pine	Ordinance tree, Remove for ditch grading	Remove tree, provide 10" in replacement	10
118	11614 Canemont	11" Sugarberry	Not ordinance tree, Remove for ditch grading	Remove tree, no replacement required	0
119	11614 Canemont	9" Sugarberry	Not ordinance tree, Remove for ditch grading	Remove tree, no replacement required	0
120	11640 Minetta	13" Ligustrum	Not ordinance tree, Remove for ditch grading	Remove tree, no replacement required	0
121	11640 Minetta	25" Cedar	Private tree	Root prune for ditch grading, Fence, Clearance prune	
122	11640 Minetta	22" Live Oak	Private tree, will not be impacted	Root prune for ditch grading, Fence, Clearance prune	
123	11640 Minetta	17" Crepe Myrtle	Not ordinance tree, Remove for ditch grading	Remove tree, no replacement required	0
124	11640 Minetta	12" Live Oak	Ordinance tree, Remove for ditch grading	Remove tree, provide 12" in replacement	12
125	11640 Minetta	9" Sugarberry	Not ordinance tree, Remove for ditch grading	Remove tree, no replacement required	0
126	11640 Minetta	16" Tallow	Private tree	Clearance prune	
Trees on Minetta Drive					
127	14549 Minetta	10" Ash	Private tree	Root prune for ditch grading, Fence, Clearance prune	
128	14549 Minetta	9" Ash	Private tree	Root prune for ditch grading, Fence, Clearance prune	
129	Vacant lot	25" Live Oak	Private tree	Fence, Root prune for ditch grading, Clearance prune, Root stimulate	
130	Vacant lot	28" Live Oak	Private tree, will not be impacted	Root prune for ditch grading, Fence, Clearance prune	
131	Vacant lot	15" Live Oak	Private tree, will not be impacted	Root prune for ditch grading, Fence, Clearance prune	0
132	Vacant lot	20" Live Oak	Private tree, will not be impacted	Root prune for ditch grading, Fence, Clearance prune	

Tree No.	Address	Description	Comments	Treatment	Required Mitigation
Trees on Minetta Drive					
133	Vacant lot	11" Tallow	Not ordinance tree	Clearance prune	
134	Vacant lot	27" Live Oak	Private tree, will not be impacted	Root prune for ditch grading, Fence, Clearance prune	
135	Vacant lot	9" Sugarberry	Dead, Not ordinance tree	Remove tree, no replacement required	0
136	Vacant lot	12" Live Oak	Ordinance tree, Remove for ditch grading	Remove tree, provide 12" in replacement	12
137	Vacant lot	14" Sugarberry	Private tree	Root prune for ditch grading, Fence, Clearance prune	
138	Vacant lot	16" Live Oak	Ordinance tree, Remove for ditch grading	Remove tree, Provide 16" in replacement	16
139	Vacant lot	7" Sugarberry	Not ordinance tree, Remove for ditch grading	Remove tree, no replacement required	0
140	Vacant lot	7" Sugarberry	Private tree, will not be impacted		
141	Vacant lot	7" Sugarberry	Private tree, will not be impacted		
142	Vacant lot	7" Sugarberry	Private tree, will not be impacted		
143	Vacant lot	7" Sugarberry	Private tree, will not be impacted		
144	Vacant lot	6" Boxelder	Private tree, will not be impacted		
145	Vacant lot	6" Boxelder	Not ordinance tree, Remove for ditch grading	Remove tree, no replacement required	0
146	14425 Minetta	4" Sugarberry	Not ordinance tree, Remove for ditch grading	Remove tree, no replacement required	0
147	14444 Minetta	5" Sugarberry	Not ordinance tree, Remove for ditch grading	Remove tree, no replacement required	0
148	14442 Minetta	11" Sugarberry	Private tree, will not be impacted		
149	14436 Minetta	15" Sugarberry	Private tree, will not be impacted		
150	14430 Minetta	10" Pine	Private tree	Root prune for ditch grading, Fence, Clearance prune	
151	14430 Minetta	15" Sugarberry	Private tree	Root prune for ditch grading, Fence, Clearance prune	
152	14418 Minetta	21" Sugarberry	Private tree, will not be impacted		
153	14410 Minetta	16" Sugarberry	Private tree, will not be impacted		
154	14402 Minetta	32" Sugarberry	Private tree, will not be impacted		
155	14413 Minetta	10" Sugarberry	Not ordinance tree, Remove for ditch grading	Remove tree, no replacement required	0
156	14413 Minetta	18" American Elm	Private tree	Root prune for ditch grading, Fence, Clearance prune	
157	14413 Minetta	12" Magnolia	Private tree	Root prune for ditch grading, Fence, Clearance prune	
158	14413 Minetta	8" Crepe Myrtle	Not ordinance tree, Remove for ditch grading	Remove tree, no replacement required	0
159	14413 Minetta	5" Boxelder	Not ordinance tree, Remove for ditch grading	Remove tree, no replacement required	0
160	14413 Minetta	22" Magnolia	Ordinance tree, thin canopy	Root prune for culvert, Fence, Clearance prune, Root stimulate	
161	14401 Minetta	14" Cedar	Private tree	Root prune for ditch grading, Fence, Clearance prune	
162	14401 Minetta	19" Cedar	Private tree	Root prune for ditch grading, Fence, Clearance prune	
163	14401 Minetta	18" Green Ash	Ordinance tree, Remove for ditch grading	Remove tree, provide 18" in replacement	18
164	14401 Minetta	20" Cedar	Private tree	Root prune for ditch grading, Fence, Clearance prune	
165	14401 Minetta	14" Cedar	Not ordinance tree		
166	14401 Minetta	7" Tallow	Not ordinance tree, Remove for ditch grading	Remove tree, no replacement required	0
167	14401 Minetta	14" Tallow	Private tree	Clearance prune	
168	14329 Minetta	22" Sugarberry	Poor condition, Ordinance tree, Remove for ditch grading	Remove tree, no replacement required	0
169	14329 Minetta	10" Sugarberry	Not ordinance tree, Remove for ditch grading	Remove tree, no replacement required	0
170	14329 Minetta	19" American Elm	Not ordinance tree, Remove for ditch grading	Remove tree, no replacement required	0
171	14329 Minetta	12" Sycamore	Not ordinance tree, Remove for ditch grading	Remove tree, no replacement required	0
172	11645 Fairmont	12" Green Ash	Private tree, will not be impacted		
173	11645 Fairmont	16" Cottonwood	Not ordinance tree, Remove for ditch grading	Remove tree, no replacement required	0
174	11645 Fairmont	11" Tallow	Not ordinance tree, Remove for ditch grading	Remove tree, no replacement required	0
175	11645 Fairmont	14" Sugarberry	Not ordinance tree, Remove for ditch grading	Remove tree, no replacement required	0
176	11645 Fairmont	10" Sugarberry	Not ordinance tree, Remove for ditch grading	Remove tree, no replacement required	0
177	11645 Fairmont	10" Tallow	Not ordinance tree, Remove for ditch grading	Remove tree, no replacement required	0
178	11645 Fairmont	10" Tallow	Not ordinance tree, Remove for ditch grading	Remove tree, no replacement required	0
179	11645 Fairmont	21" Sugarberry	Ordinance tree, Remove for ditch grading	Remove tree, provide 21" in replacement	21
180	14254 Minnetta	13" Boxelder	Not ordinance tree, Remove for ditch grading	Remove tree, no replacement required	0
181	14254 Minnetta	8" Sugarberry	Not ordinance tree, Remove for ditch grading	Remove tree, no replacement required	0
182	14254 Minnetta	12" Tallow	Not ordinance tree, Remove for ditch grading	Remove tree, no replacement required	0
183	14254 Minnetta	15" Sugarberry	Not ordinance tree, Remove for ditch grading	Remove tree, no replacement required	0
184	14254 Minnetta	12" Sugarberry	Not ordinance tree, Remove for ditch grading	Remove tree, no replacement required	0
185	14254 Minnetta	12" Sugarberry	Not ordinance tree, Remove for ditch grading	Remove tree, no replacement required	0
186	14254 Minnetta	10" Tallow	Not ordinance tree, Remove for ditch grading	Remove tree, no replacement required	10
187	14243 Minetta	20" Sycamore	Ordinance tree, Remove for ditch grading	Remove tree, Provide 20" in replacement	20
188	14243 Minetta	19" Sycamore	Not ordinance tree, Remove for ditch grading	Remove tree, no replacement required	0
189	14243 Minetta	11" Sugarberry	Not ordinance tree, Remove for ditch grading	Remove tree, no replacement required	0
190	14243 Minetta	9" American Elm	Not ordinance tree, Remove for ditch grading	Remove tree, no replacement required	0
191	14243 Minetta	19" Sycamore	90% dead, Not ordinance tree, remove for ditch grading	Remove tree, no replacement required	0

0 20 40 80

No.	Date	Revisions	App.

SWTP Surface Water Transmission Program

LAN Lockwood, Andrews & Newnam, Inc.

Texas American Engineering

SURVEYED BY: MARTINEZ, GUY & MAYBIK, INC. C.O.H. Field Book P-

C.N. Koehl
Urban Forestry, Inc.
3237 Canvasback Street • Katy, Texas 77493

Craig N. Koehl 2/3/2011

CITY OF HOUSTON
DEPARTMENT OF PUBLIC WORKS AND ENGINEERING

SWTP CONTRACT 74A-2

TREE PROTECTION PLAN
SHEET 2 OF 6

WBS NO. S-000900-0110-4
DRAWING SCALE 1"=40'
CITY OF HOUSTON PM
ARTHUR C. MORRIS, P.E.
SHEET NO. 82 OF 108

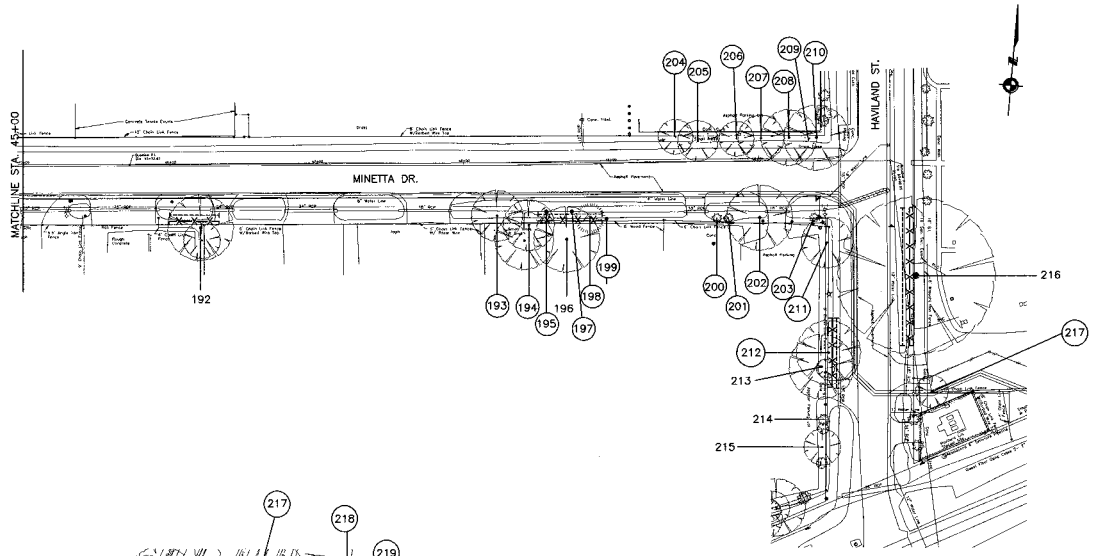

NOTE:
THIS TREE PROTECTION PLAN WAS DEVELOPED WITH INFORMATION PROVIDED BY DESIGN ENGINEER IN DRAWINGS DATED AUGUST 2010. THE PLAN CONSIDERS ALL FITTINGS, VERTICAL OFFSETS AND AREAS OF NECESSARY EXCAVATION. CHANGES MADE TO DESIGN MAY COMPROMISE THE TREE PROTECTION PLAN. REFER SPECIFICATIONS 01562 AND 02915. CONDITION OF EACH TREE IS BASED ON VISUAL EVALUATION AT TIME OF DESIGN. CONDITION AND STRUCTURAL INTEGRITY OF EACH TREE IS NOT GUARANTEED BY DESIGNER AT ANY POINT IN THE FUTURE, AS ENVIRONMENTAL AND MAINTENANCE INFLUENCES ON EACH TREE CAN NOT BE DETERMINED BY DESIGNER.

TREE PRESERVATION PLAN LEGEND

- TREE NUMBER/LOCATION
- TREES TO BE REMOVED
- TREE PROTECTION FENCE
- ROOT PRUNING TRENCH
- REPLACEMENT TREE

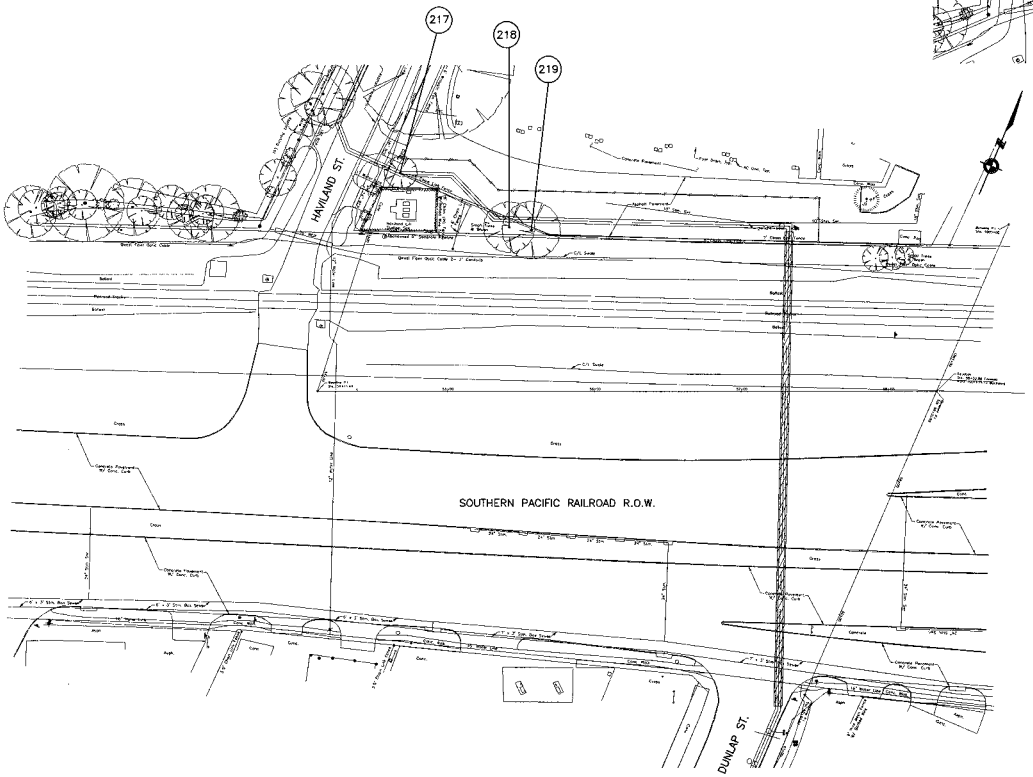

Tree No.	Address	Description	Comments	Treatment	Required Mitigation
Trees on Minetta Drive					
192	14229 Minetta	25" Sycamore	Private tree	Root prune for ditch grading, Fence, Clearance prune	
193	14209 Minetta	9" Sugarberry	Dead, Not ordinance tree	Remove tree, no replacement required	0
194	14209 Minetta	26" Cottonwood	Ordinance tree, Remove for ditch grading	Remove tree, provide 26" in replacement	26
195	14209 Minetta	6" Sugarberry	Not ordinance tree, Remove for ditch grading	Remove tree, no replacement required	0
196	14209 Minetta	25" American Elm	Private tree	Root prune for ditch grading, Fence, Clearance prune	
197	14209 Minetta	6" Sugarberry	Not ordinance tree, Remove for ditch grading	Remove tree, no replacement required	0
198	14209 Minetta	8" American Elm	Not ordinance tree, Remove for ditch grading	Remove tree, no replacement required	0
199	14209 Minetta	4" Sugarberry	Not ordinance tree, Remove for ditch grading	Remove tree, no replacement required	0
200	14209 Minetta	3" Cedar	Not ordinance tree, Remove for ditch grading	Remove tree, no replacement required	0
201	14209 Minetta	3" Cedar	Not ordinance tree, Remove for ditch grading	Remove tree, no replacement required	0
202	14209 Minetta	18" Winged Elm	Ordinance tree, Remove for ditch grading	Remove tree, provide 18" in replacement	18
203	14209 Minetta	5" Cedar	Not ordinance tree, Remove for ditch grading	Remove tree, no replacement required	0
204	Park	11" Cottonwood	Not ordinance tree, Remove for ditch grading	Remove tree, no replacement required	0
205	Park	14" Mulberry	Not ordinance tree, Remove for ditch grading	Remove tree, no replacement required	0
206	Park	13" Mulberry	Not ordinance tree, Remove for ditch grading	Remove tree, no replacement required	0
207	Park	13" Sugarberry	Not ordinance tree, Remove for ditch grading	Remove tree, no replacement required	0
208	Park	16" Sugarberry	Not ordinance tree, Remove for ditch grading	Remove tree, no replacement required	0
209	Park	9" Sugarberry	Not ordinance tree, Remove for ditch grading	Remove tree, no replacement required	0
210	Park	21" Sugarberry	Ordinance tree, Remove for ditch grading	Remove tree, provide 21" in replacement	21
Trees on Haviland Street					
211	14209 Minetta	15" Sugarberry	Not ordinance tree, Remove for ditch grading	Remove tree, no replacement required	0
212	14209 Minetta	16" Black Willow	Not ordinance tree, Remove for ditch grading	Remove tree, no replacement required	0
213	14209 Minetta	15" Winged Elm	Private tree	Root prune for ditch grading, Fence, Clearance prune	
214	14209 Minetta	4" Crepe Myrtle	Not ordinance tree		
215	14209 Minetta	15" Mulberry	Not ordinance tree		
216	12500 Hillcroft	35" Live Oak	Private tree	Root prune for ditch grading, Fence, Clearance prune	
217	Waterline Easement	5" Sugarberry	Easement, Remove for waterline	Remove tree, no replacement required	0
218	Waterline Easement	14" American Elm	Easement, Remove for waterline	Remove tree, no replacement required	0
219	Waterline Easement	16" American Elm	Easement, Remove for waterline	Remove tree, no replacement required	0

0 20 40 80

SWTP
Southeast Water Transmission Program

Landtrust, Anderson & Associates, Inc.
2929 Briarpark Drive Houston, TX 77042
A-108 F-1 SBE-1 SBE-2

Texas American Engineering
2929 Briarpark Drive Suite 1000
Houston, TX 77042

SURVEYED BY: MARTINEZ, GUY & MAYBIK, INC.
C.O.H. Field Book P-

PARKS AND RECREATION

C.N. Koehl
Urban Forestry, Inc.
3237 Canvasback Street • Katy, Texas 77493
281-391-0001 Fax 281-391-0002
Approved Craig N. Koehl 2/3/2011

CITY OF HOUSTON
DEPARTMENT OF PUBLIC WORKS AND ENGINEERING

SWTP CONTRACT 74A-2

TREE PROTECTION PLAN
SHEET 3 OF 6

WBS NO.
S-000900-0110-4

DRAWING SCALE
1"=40'

CITY OF HOUSTON PM
ARTHUR C. MORRIS, P.E.

SHEET NO. 83 OF 108

No.	Date	Revisions	App.

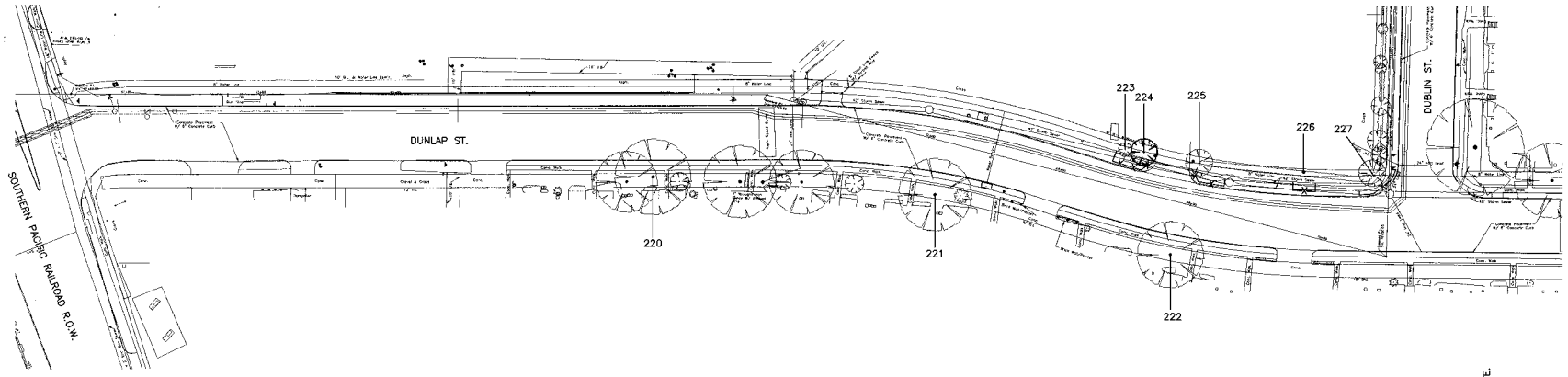

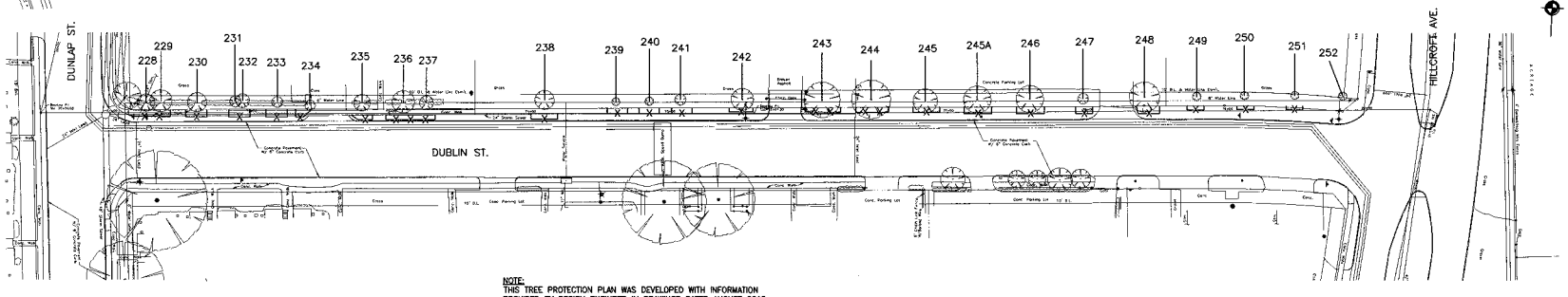

NOTE:
THIS TREE PROTECTION PLAN WAS DEVELOPED WITH INFORMATION PROVIDED BY DESIGN ENGINEER IN DRAWINGS DATED AUGUST 2010. THE PLAN CONSIDERS ALL FITTINGS, VERTICAL OFFSETS AND AREAS OF NECESSARY EXCAVATION. CHANGES MADE TO DESIGN MAY COMPROMISE THE TREE PROTECTION PLAN. REFER SPECIFICATIONS 01562 AND 02915. CONDITION OF EACH TREE IS BASED ON VISUAL EVALUATION AT TIME OF DESIGN. CONDITION AND STRUCTURAL INTEGRITY OF EACH TREE IS NOT GUARANTEED BY DESIGNER AT ANY POINT IN THE FUTURE, AS ENVIRONMENTAL AND MAINTENANCE INFLUENCES ON EACH TREE CAN NOT BE DETERMINED BY DESIGNER.

Tree No.	Address	Description	Comments	Treatment	Required Mitigation
Trees on Dunlap Street					
220	12800 Dunlap	19" Live Oak	Private tree, Clearance prune for TCP traffic	Clearance prune	
221	12800 Dunlap	26" Lacebark Elm	Private tree, Clearance prune for TCP traffic	Clearance prune	
222	12800 Dunlap	17" Arizona Ash	Private tree, Clearance prune for TCP traffic	Clearance prune	
223	12865 Dunlap	5" Live Oak	Private tree	Fence	
224	12865 Dunlap	7" Live Oak	Private tree	Fence, Clearance prune	
225	12865 Dunlap	8" Live Oak	Private tree	Fence, Clearance prune	
226	12865 Dunlap	5" Live Oak	Private tree	Fence, Clearance prune	
227	12865 Dunlap	9" Live Oak	Private tree	Fence, Clearance prune	
Trees on Dublin Street					
228	12865 Dunlap	5" Live Oak	Private tree	Fence	
229	12865 Dunlap	6" Live Oak	Private tree	Fence	
230	12865 Dunlap	5" Live Oak	Private tree	Fence	
231	12865 Dunlap	5" American Elm	Private tree	Fence	
232	12865 Dunlap	4" Live Oak	Private tree	Fence	
233	12865 Dunlap	4" Live Oak	Private tree	Fence	
234	12865 Dunlap	4" Live Oak	Private tree	Fence	
235	12865 Dunlap	6" Live Oak	Private tree	Fence, Clearance prune	
236	12865 Dunlap	7" Live Oak	Private tree	Fence, Clearance prune	
237	12865 Dunlap	6" Live Oak	Private tree	Fence, Clearance prune	
238	14060 Dublin	6" Live Oak	Private tree, will not be impacted	Fence	
239	14060 Dublin	3" Live Oak	Private tree	Fence	
240	14060 Dublin	2" Live Oak	Private tree	Fence	
241	14060 Dublin	3" Live Oak	Private tree	Fence	
242	14060 Dublin	9" Live Oak	Private tree	Fence	
243	14060 Dublin	11" Live Oak	Private tree	Fence	
244	14060 Dublin	10" Live Oak	Private tree	Fence, Clearance prune	
245	14060 Dublin	8" Live Oak	Private tree	Fence	
245A	14060 Dublin	10" Live Oak	Private tree	Fence, Clearance prune	
246	14060 Dublin	9" Live Oak	Private tree	Fence, Clearance prune	
247	14060 Dublin	5" Live Oak	Private tree	Fence	
248	14060 Dublin	11" Live Oak	Private tree	Fence, Clearance prune	
249	14060 Dublin	3" Live Oak	Private tree	Fence	
250	14060 Dublin	3" Live Oak	Private tree	Fence	
251	14060 Dublin	3" Live Oak	Private tree	Fence	
252	14060 Dublin	3" Live Oak	Private tree	Fence	

TREE PRESERVATION PLAN LEGEND

- TREE NUMBER/LOCATION
- TREES TO BE REMOVED
- TREE PROTECTION FENCE
- ROOT PRUNING TRENCH
- REPLACEMENT TREE

0 20 40 80

SWTP
Houston Water Transmission Program

Lockwood, Andrews & Newnam, Inc.
A CH2M HILL COMPANY
2929 Briarpark Drive Houston, TX 77042

Texas American Engineering
[illegible]

SURVEYED BY: MARTINEZ, CLIY & MAYBIK, INC.
C.O.H. Field Book P-

PARK AND RECREATION

C.N. Koehl
Urban Forestry, Inc.
9237 Canvasback Street • Katy, Texas 77493

Approved C.N.Koehl 2/3/2011

CITY OF HOUSTON
DEPARTMENT OF PUBLIC WORKS AND ENGINEERING

SWTP CONTRACT 74A-2

TREE PROTECTION PLAN
SHEET 4 OF 6

WBS NO.
S-000900-0110-4

DRAWING SCALE
1"=40'

CITY OF HOUSTON PM
ARTHUR C. MORRIS, P.E.

SHEET NO. 84 OF 108

No.	Date	Revisions	App.

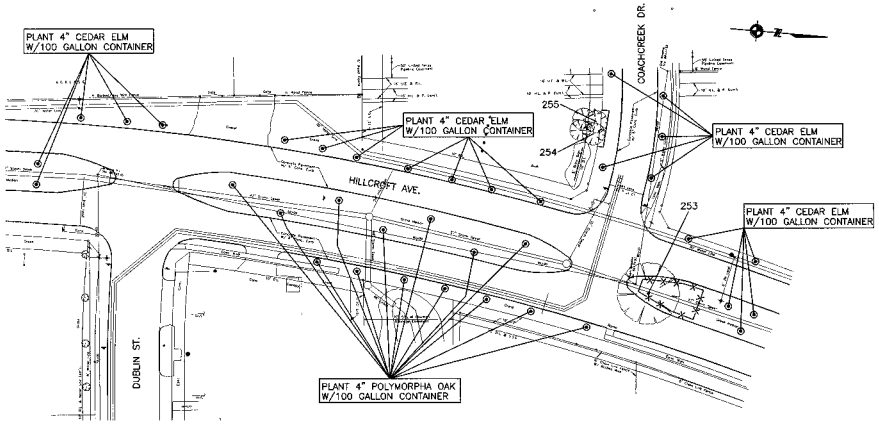

Tree No.	Address	Description	Comments	Treatment	Required Mitigation
Trees on Hillcroft Avenue					
253	Esplanade of Hillcroft	19" Arizona Ash	Decay, Poor condition	Fence, Clearance prune	
Trees on Coachcreek Drive					
254	Not available	9" Sweetgum	Private tree	Fence	
255	Not available	9" Sweetgum	Private tree	Fence	
				Total Replacement required	0

NOTE:
THIS TREE PROTECTION PLAN WAS DEVELOPED WITH INFORMATION PROVIDED BY DESIGN ENGINEER IN DRAWINGS DATED AUGUST 2010. THE PLAN CONSIDERS ALL FITTINGS, VERTICAL OFFSETS AND AREAS OF NECESSARY EXCAVATION. CHANGES MADE TO DESIGN MAY COMPROMISE THE TREE PROTECTION PLAN. REFER SPECIFICATIONS 01562 AND 02915. CONDITION OF EACH TREE IS BASED ON VISUAL EVALUATION AT TIME OF DESIGN. CONDITION AND STRUCTURAL INTEGRITY OF EACH TREE IS NOT GUARANTEED BY DESIGNER AT ANY POINT IN THE FUTURE, AS ENVIRONMENTAL AND MAINTENANCE INFLUENCES ON EACH TREE CAN NOT BE DETERMINED BY DESIGNER.

TREE PRESERVATION PLAN LEGEND

- TREE NUMBER/LOCATION
- TREES TO BE REMOVED
- TREE PROTECTION FENCE
- ROOT PRUNING TRENCH
- REPLACEMENT TREE

0 20 40 80

SWTP
Surface Water Transmission Program

Lockwood, Andrews & Newnam, Inc.
2 NW 2 WAY 600000
Texas American Engineering

SURVEYED BY: MARTINEZ, GUY & MAYBIK, INC.
C.O.H. Field Book P-

PARK AND RECREATION

C.N. Koehl
Urban Forestry, Inc.
3237 Canvasback Street • Katy, Texas 77493

Craig Koehl 2/3/2011

CITY OF HOUSTON
DEPARTMENT OF PUBLIC WORKS AND ENGINEERING

SWTP CONTRACT 74A-2

TREE PROTECTION PLAN
SHEET 5 OF 6

WBS NO.
S-000900-0110-4

DRAWING SCALE
1"=40'

CITY OF HOUSTON PM
ARTHUR C. MORRIS, P.E.

SHEET NO. 85 OF 108

No.	Date	Revisions	App.

		TOTAL REPLACEMENT INCHES REQUIRED	300 inches
		Tree Replacement List	
Quantity	Caliper Size	Species	Container/Tree Spade size
38	4	Chinese Pistache (Pistacia chinensis)	100 gallon container
22	4	Cedar Elm (Ulmus crassifolia)	100 gallon container
1	4	Southern Magnolia (Magnolia grandiflora)	100 gallon container
14	4	Polymorpha Oak (Quercus polymorpha)	100 gallon container
	TOTAL REPLACEMENT	INCHES INCLUDED IN PLAN	300

NOTE: Tree replacement locations shown on plans must be coordinated with adjacent property owner and City of Houston Urban Forestry prior to excavation for planting. Coordination shall be completed by construction contractor's Certified Arborist.

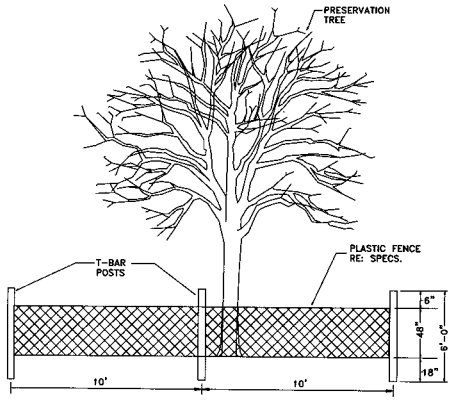

TREE PROTECTION FENCING DETAIL A
NOT TO SCALE

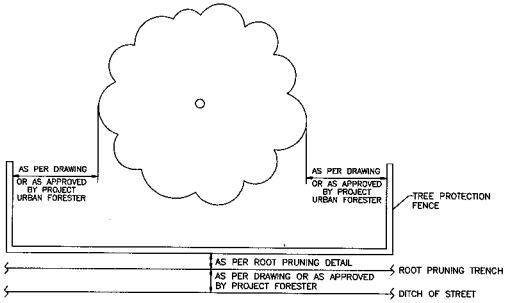

TREE PROTECTION FENCING DETAIL B
NOT TO SCALE

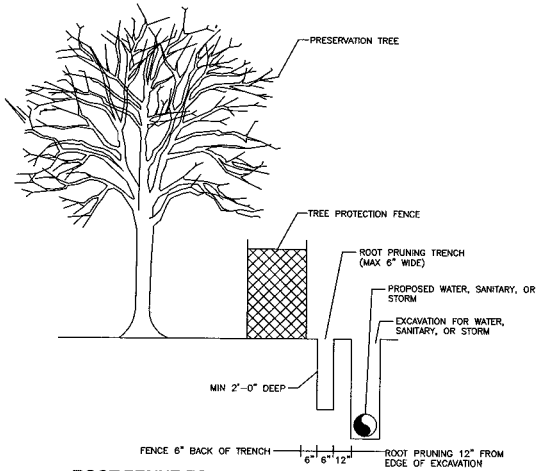

ROOT PRUNE FOR WATER, SANITARY, OR STORM LINE
NOT TO SCALE

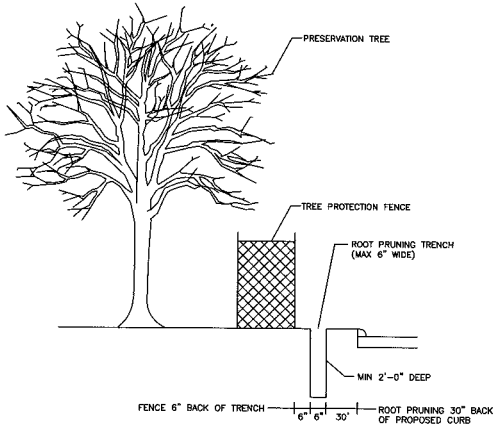

ROOT PRUNE FOR STREET-CURB & GUTTER - NO OCC
NOT TO SCALE

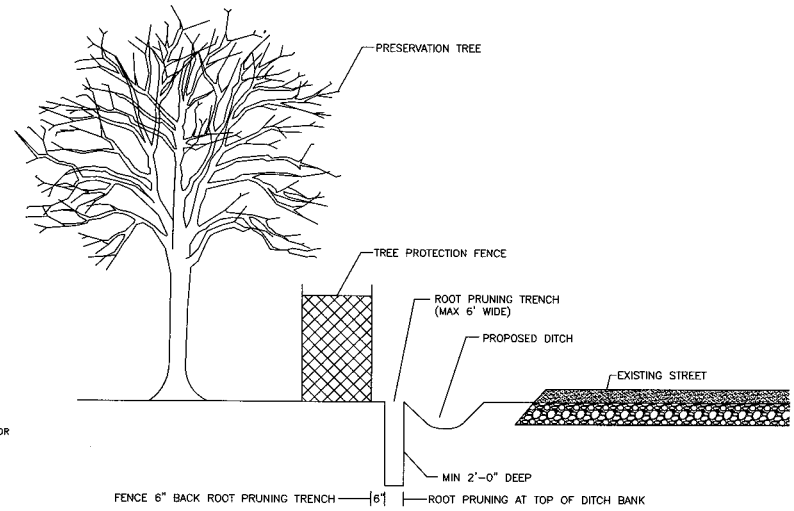

ROOT PRUNE FOR DITCH DETAIL
NOT TO SCALE

No.	Date	Revisions	Apv.

SWTP
Surface Water Transmission Program

Lockwood, Andrews & Newnam, Inc.
A LAN & ANN COMPANY
2500 Wilcrest Drive, Houston, TX 77042

Texas American Engineering
[illegible]

SURVEYED BY: MARTINEZ, GUY & MAYBIK, INC.
C.O.H. Field Book P--

PREPARED AND PRESENTED BY:

C.N. Koehl
Urban Forestry, Inc.
5237 Canvasback Street • Katy, Texas 77493
281-391-4663 cnkoehl@comcast.net
Craig N Koehl 2/2/2011

CITY OF HOUSTON
DEPARTMENT OF PUBLIC WORKS AND ENGINEERING

SWTP CONTRACT 74A-2

TREE PROTECTION PLAN
SHEET 6 OF 6

WBS NO.
S-000900-0110-4

DRAWING SCALE
1"=40'

CITY OF HOUSTON PM
ARTHUR C. MORRIS, P.E.

SHEET NO. 86 OF 108