CERTIFICATE OF APPROPRIATENESS
ALTERATION & ADDITION CHECKLIST

PLANNING & DEVELOPMENT DEPARTMENT

Well in advance of the COA application deadline contact staff to discuss your project and, if necessary, to make an appointment to meet with staff for a project consultation.

Complete all applicable items and submit with the COA application form. Staff can assist you in determining what items are required for your scope of work. An incomplete application may cause delays in processing or may be deferred to the next agenda. Application materials must clearly represent current and proposed conditions. Refer to Houston Code of Ordinances, Ch. 33 VII, Sec. 33-241 for approval criteria for alteration, rehabilitation, restoration and additions.

PROPERTY ADDRESS: 1022 Peddie St., 77009

BUILDING TYPE

- [x] single-family residence
- [ ] multi-family residence
- [ ] commercial building
- [ ] mixed use building
- [ ] institutional building
- [ ] garage
- [ ] carport
- [ ] accessory structure
- [ ] other

ALTERATION TYPE

- [ ] addition
- [ ] foundation
- [ ] wall siding or cladding
- [ ] windows or doors
- [ ] porch or balcony
- [x] roof
- [ ] awning or canopy
- [ ] commercial sign
- [ ] ramp or lift
- [ ] other

WRITTEN DESCRIPTION

- [ ] property description, current conditions and any prior alterations or additions
- [x] proposed work; plans to change any exterior features, and/or addition description
- [ ] current building material conditions and originality of any materials proposed to be repaired or replaced
- [ ] proposed new materials description; attach specification sheets if necessary

PHOTOGRAPHS label photos with description and location

- [ ] elevations of all sides
- [x] detail photos of exterior elements subject to proposed work
- [ ] historical photos as evidence for restoration work

DRAWINGS scale like drawings the same; include all dimensions and drawing scale; label with cardinal directions

- [ ] current site plan
- [ ] proposed site plan
- [ ] current floor plans
- [ ] proposed floor plans
- [ ] current window and door schedule
- [ ] proposed window and door schedule
- [ ] demolition plan
- [ ] current roof plan
- [x] proposed roof plan
- [ ] current elevations (all sides)
- [ ] proposed elevations (all sides)
- [ ] massing/perspective

CERTIFICATE OF APPROPRIATENESS
APPLICATION FORM

PLANNING & DEVELOPMENT DEPARTMENT

PROPERTY

Address 1022 Peddie Street

Historic District / Landmark Heights-North Norhill HCAD # 0620890000006

Subdivision North Norhill Lot LT 6 Block 110 North Norhill

DESIGNATION TYPE

- [x] Landmark
- [ ] Protected Landmark
- [ ] Archaeological Site
- [ ] Contributing
- [ ] Noncontributing
- [ ] Vacant

PROPOSED ACTION

- [x] Alteration or Addition
- [ ] Restoration
- [ ] New Construction
- [ ] Relocation
- [ ] Demolition
- [ ] Excavation

DOCUMENTS

- [ ] Application checklist for each proposed action and all applicable documentation listed within are attached

OWNER

Name Jonathan Sanders

Company TWS Construction

Mailing Address 1022 Peddie St
Houston, TX 77009

Phone 713-412-5859

Email jsander4@gmail.com

Signature

Date 11/10/16

APPLICANT (if other than owner)

Name

Company

Mailing Address

Phone

Email

Signature

Date

ACKNOWLEDGEMENT OF RESPONSIBILITY

Requirements: A complete application includes all applicable information requested on checklists to provide a complete and accurate description of existing and proposed conditions. Preliminary review meeting or site visit with staff may be necessary to process the application. Owner contact information and signature is required. Late or incomplete applications will not be considered.

Deed Restrictions: You have verified that the work does not violate applicable deed restrictions.

Public Records: If attached materials are protected by copyright law, you grant the City of Houston, its officers, agencies, departments, and employees, non-exclusive rights to reproduce, distribute and publish copyrighted materials before the Houston Archaeological and Historical Commission, the Planning Commission, City Council, and other City of Houston commissions, agencies, and departments, on a City of Houston website, or other public forum for the purposes of application for a Certificate of Appropriateness or building permit, and other educational and not for profit purposes. You hereby represent that you possess the requisite permission or rights being conveyed here to the City.

Compliance: If granted, you agree to comply with all conditions of the COA. Revisions to approved work require staff review and may require a new application and HAHC approval. Failure to comply with the COA may result in project delays, fines or other penalties.

Planner: _____ *Application received:* ___/___/___ *Application complete:* ___/___/___

HOUSE INTERIOR REMODELING AND REBUILD SECTION

PERMIT SET FOR HOUSE ON
1022 PEDDIE STREET
HOUSTON, TX. 77009

GENERAL NOTES

NOTE: if conflict with notes on plans, most restrictive requirements would govern.
2x4 light framing to be stud grade.
joist and rafters to be No.2 D.F.(Doug Fir).–larch.
Beams, stringersand headers to be No.1 D.F. –larch.
Posts and timbers be No.1 D.F.–larch.
Unless otherwise specified, timber shall be Doug Fir and shall conform to W.C.L.I.B.
Standard Grading and Dressing, Rules.

THIS PROJECT SHALL COMPLY WITH THE
2012 IRC – INTERNATIONAL RESIDENTIAL CODE
2012 UMC – UNIFORM MECHANICAL CODE
2012 UPC – UNIFORM PLUMBING CODE
2014 NEC – NATIONAL ELECTRICAL CODE
2012 IFC – INTERNATIONAL FIRE CODE
either
2009 IECC – INTERNATIONAL ENERGY CONSERVATION CODE
AS ADOPTED AND AMENDED BY ***THE CITY OF HOUSTON***

1 ALL STRUCTURAL: beam/beam beam/column and column/foundation must be positively connected with Simpson or equivalent connectors regardless of lack of connection detailing on plans. Standard connections u.o.n. Simpson or equivalent: beam/column "CC" beam/beam–"HUFT", column/pad footing–"CB".

2 Combination florescent light/vent fan, capable of 5 air changes/hour, at new interior bathrooms, or add where exterior bathroom window is removed.

3 Water closets: 1.6 GPF
Shower heads: 2.5 GPM
Laundry Faucets: 2.2 GPM
Sink Faucets: 2.2 GPM

4 stucco/ siding

5 1x lap or vertical siding \" cdx plywood .

6 Crawl space access to raised foundation 18"x24"

7 Crawl space ventilation 1/150 of area -------- sq. ft..

8 Attic ventilation 1/150 of attic area -------- sq. ft.. Max 144 sq. inches in fire hazard area.

9 3 tab class "A" fire rated shingles 0/15 # felt and over 2 layers 15 # felt for 3/12 pitch or less.

10 Tile roof. 6lb./sq.ft/0/30 # felt –ICBO ER–4907.

11 All hose bibs are required to be protected with a permanently attached anti–siphon device. Min. 1 hose bub required front and back.

12 Ground fault interceptor protection (GFI) for all exterior receptacless, in bathrooms, in unfinished basements/ crawl spaces, in garages and at counter top in kitchens or at bar sinks.

13 Switched light fixture in evry habitable room, bathroom, stairway, hall, attathed garage and at outdoor entrances.

14 Provide 2 GFI protected exterior receptacless, weather proof w/ bubble cover on at the rear and front of each dweling unit.

15 Outlets are required for kitchen counter space 12" and wider in sach a manner that no point along the wall is more than 2' from outlet or more than 4' for island and peninsula counters.

16 Outlets for wall spaces 2' and wider at maximum 12'o.c. so that no point along a wall, fixed glass, or guard rail is more than 6' from outlet.

17 A dedicated 20 amp branch circuit from bathroom receptacless is required.

18 4" thk. concrete landing 1" below threshold min. 36"x min. 36" wide or full width of door(s) or full width of patio doors, or French doors.

19 Water heater will be securely strapped to wall with two straps. One within 1/3 of top an 1/3 of bottom. Elevate water heater min, 18" above garage door on 1 hr. pane. pedestal.

20 Required swimming pool/spa fencing must be maintained during construction or the pool/spa shall be emptied.

21 Provide house street number visible from the street. Numbers shall be of non combustible in Very High Sevrity Zones.

22 Provide attic access 22"x30", readily accessible with min. 30" clear head room.

23 Provide approved smoke detectors. Additional info sheet 1.

24 Showers shall be finished 70" above drain with materials not adversely affected by moisture.

25 Anti scalding shower and tub and shower valves are required and shall be of pressure balance or thermostatic. Mixin valve type. Sec.410.7 UPC.

26 Access panel (12"x12") required for tub strap slip–joint or use non–slip (welded) loint.

27 Stucco lath and drywall shall be nailed to studs and top–bottom plates.

28 Sefety glazin is required at wardrobe doors, shower doors, and windows at bath tubs and showers and within 2' of doors.

29 Provide Approved spark arrestor at fireplace chimney.

30 Wall between house living area and garage (R–3, U–1) shall be "Type X" drywall, floor to floor sheathing with taped joints.

31 Doors between R–3 and U–1, 1–⅜" solid core (20 min.) door, self–closing and tight–fitting.

32 Provide balloon framing at exterior wall siding on sloping ceilling.

33 Provide double top plate with 48" lap splices strapped with simpson strap ST6224.

34 Provide fire blocking, vertical or horizontal, shall coform to IRC R302.11.

35 Studs supporting 3 stories shall be 2x6 or 3x4 @ 16" o.c.

36 Max. stud height is 10' for bearing walls, max. 14' for non bearing 2x4, fire block at mid span.

37 Where plates or sole plates cut for pipes, strap 1–\" wide by 24" long by _" thk. shall be fastened across the opening with 16d nails on each side.

38 Roof sheating: \" T&G cdx structural 1 plywood or O.S.B.B.N: 8d @6" o.c., EN: 8d @6" o.c.; and FN: 8d @12" o.c. u.o.n. at roof framing plan.

39 Floor sheating: ⅜" T&G cdx structural 1 plywood or APA rated O.S.B.; B.N.: 10d @6" o.c., EN: 10d @6" o.c., and FN. 10d @10" o.c. Use ring shank nails and glue plywood to framing according to manufacturers specification.

40 Provide double floor joist under all parallel partitions, solid block joist under walls and bearing points.

41 Floor joist framing from opposite side of beam, girder or partition shall be lapped at least 3" or the opposing joist shall be tied together in an approved manner.

42 Provide 5/8" anchor bolts embedded 7" into concrete or masonry @6" o.c. min. 2 bolts per plate, one bolt within 12" of plate end and corners. NOTE: Bolts shall extend 5" into footing on two (2) pour system (extra long bolts). use 3/16" x 2' sq. plate washers.

43 Provide reinforcing steel in slab.

44 Min. depth of footing below natural grade and width of footing. 12"x12" supporting one story structure; and min. 15" wide x18" deep for two story footing, u.o.n..

45 Use type V cement for high sulfate soils 2500 p.s.i., u.o.n.

46 Footing should be examined by the Building Inspector prior to concrete pour. All special bolting and shear hardware to be tied in place.

47 Provide stucco base screed.

48 Foundation support wood shall extend at least 6" above the adjacent finished grade paving or sidewalk.

49 Footing shall be provided under all bearing walls.

50 Plywood shear wall sheating: \" cdx structural 1 plywood or APA rated B.N.: 8d @6" o.c., EN: 8d @6" o.c., and FN. 8d @12" o.c. u.o.n. on framing plan.

51 All second floor shear walls shall properly be attached to the roof diaphragm.

52 All glazing shall be dual glazed unless otherwise recommended by certified energy report.

53 Provide R–13 in the exterior walls, R–19 in wood floors over non living areas, provide R–30 in the roof or calling unless otherwise recommended be certified energy report.

54 Dryer vent shall be 4" smooth round metal, max. length of 14" with 90° bends. Any deviation shall be engineered an approved by Mechanical unit.

55 All epoxy installations require special inspection, u.o.n.

56 Provide at least one window or exterior door approved for emergency egress or rescue for every room used for sleeping purposes and at basements. This window or opening must have a clear net open able dimension of 24" high and 20" wide AND total 5.7 sq. ft.. The max. finished sill height is 44" above floor.

57 Fluorescent lights rated at not less than 40 lumens/watt for general lighting in kitchens and bathrooms.

58 HEATING SYSTEM IN ATTIC. attic access min. 30"x30" not over 20' from equipment. Unobstructed passage 24" wide with solid continuous flooring from access to equipment/control panel. A level, unobstructed work platform min. 30" in front of equipment with 30" headroom. Light over equipment with switch at access. Air supply opening of 2 sq.in./1,000 BTU for blower types and 7 sq.in./1,000 BTU for gravity feed type.

59 NOTE: "Required swimming pool/spa fencing must be maintained during construction or the pool/spa shall be emptied". (IF APPLICABLE)

60 Radiant barrier required in climate zones 2,4,8–15. Required this submitting. YES------, NO------

61 The discharge of pollutants to any storm drainage system is prohibited. No oil waste, petroleum byproducts, soil particulate, construction waste materials or waste water generated on construction sites or by construction activities shall be placed, conveyed or discharged into the street, gutter or storm drain system.

62 Approval must be obtained and/or fees paid to following agencies. This information should reach the project owner or other individual with authority to act on it and it should reach them as early as possible in the plan review process.
( ) City Planning Division Zoning Clearance
( ) School Fees
( ) Other

63 Exterior lath: Provide two layers of Grage D paper over all wood base sheating. (CBC 2506.4)

64 Provide a weep scteed for stucco at foundation plate line a min. 4" above grade. (CBC 2506.5)

65 Tempered patio doors or French doors–low "E" – dual

66 (TYP) strap new wall to existing at top plate with ST 6236.

SMOKE AND CARBON MONOXIDE DETECTORS

Hardwired smoke detectors with a battery backup are required. Show all locations with symbol SD on plan (310.9.1)

Provide smoke detectors in each hallway leading to sleeping rooms, each sleeping room of new an existing construction, top of stairway, and in each story. In new construction detectors to be hard wired with battery back up. UBC 310.9.1.4 Detectors shall be interconnected to sound at the same time.

Detectors are not to be located in kitchen, garage or within 3 feet from door or kitchen or bathroom, or supply air registers.

PROJECT TEAM

OWNER:	JONATHAN SANDER 1022 PEDDIE STREET HOUSTON, TX 77009 jsander4@gmail.com	(713) 412–5859
DESIGNER:	ISAAC LEVY 50 BRIAR HOLLOW LANE SUITE 210 E HOUSTON, TX. 77027 ISAACARCHITECT@GMAIL.COM	(818) 451–6681
ENGINEER:	SAM IBRAHIM ASI CONSTRUCTION & CONSULTING LLC. 2904 LAUREL BROOK LN. PEARLAND, TX. 77584 SIBRAHIM0506@GMAIL.COM	(832) 693–8905

DRAWING INDEX

ARCHITECTURAL:

A0.1	TITLE SHEET
A2.1	PLANS
A2.2	ROOF PLANS, ELEVATIONS
A2.3	ELECTRICAL PLAN

STRUCTURAL:

S1.0	FRAMING PLAN
S1.1	FRAMING DETAILS

SITE LOCATION

N.T.S.

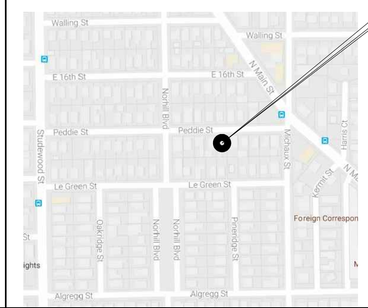

SITE MAP

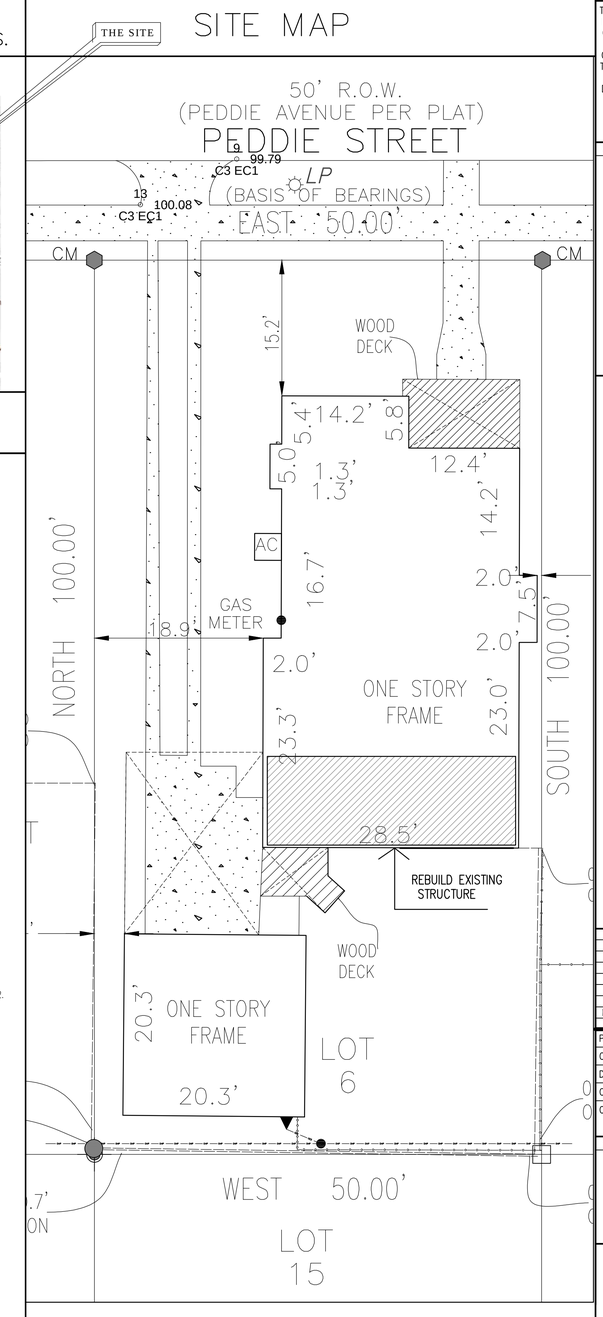

PROJECT DATA

PROJECT DESCRIPTION:	REMODELING OF EXISTING 1–STORY, SINGLE FAMILY RESIDENCE & CONSTRUCTION OF INTERIOR WALLS.
SITE ADDRESS:	1022 PEDDIE STREET HOUSTON, TX 77009
ASSESSORS PARCEL NUMBER:	
LEGAL DESCRIPTION:	LOT: 6, BLOCK: 110 SUBDIVISION: NORTH NORHILL RECORDED: VOL. 6 PAGE 28 HARRIS COUNTY, TX
EXISTING SOIL CONDITIONS:	PREVIOUSLY GRADED & DISTURBED
LOT USE **EXISTING:**	SINGLE FAMILY RESIDENTIAL
PROPOSED:	SINGLE FAMILY RESIDENTIAL
LOT ZONING:	
OVERLAY ZONE DESIGNATION:	NONE
OCCUPANCY:	RESIDENTIAL
BUILDING CODE:	2012 I.R.C.
CONSTRUCTION TYPE:	
NUMBER OF STORIES **EXISTING:**	1 STORY
PROPOSED:	1 STORY
OVERALL BUILDING HEIGHT **EXISTING:**	19'–0"
PROPOSED:	19'–0"
LOT SIZE:	5,000 S.F.
SCOPE OF WORK:	1. REPLACE INTERIOR DOORS. 2. RELOCATE UTILITY ROOM. 3. RELOCATE DOOR FOR BEDROOM 2. 4. OPEN WALLS BETWEEN KITCHEN TO LIVING ROOM AND BREAKFAST AREA. 5. RELOCATE CLOSET FOR BEDROOM 1 AND 2. 6. RE–FRAME WALLS AND/OR CEILING.

AREA CALCULATION

PROPOSED – HABITABLE	EXIST. BLDG	PROP.. BLDG
1 LEVELS	1,334 S.F.	-- S.F.
NON–HABITABLE GARAGE	412 S.F.	

ILA

I.L.A. Interior & Exterior Planning
Design & Consulting
Tel.: (818) 451-6681

DESIGN & CONSTRUCTION
50 BRIAR HOLLOW LANE, SUITE #210 EAST
HOUSTON TX, 77027
isaacarchitect@gmail.com

THE CONTRACTOR IS TO VERIFY ALL DIMENSIONS ON SITE BEFORE BUILDING AND REPORT ANY ERROR, OMISSIONS, OR DISCREPANCIES TO THE ARCHITECT. DRAWINGS ARE INSTRUMENTS OF SERVICE AND REMAIN THE PROPERTY OF THE ARCHITECT. COPYRIGHT OF THE DRAWINGS AND THE WORK EXECUTED THEREFORE ARE RESERVED BY THE ARCHITECT. DRAWINGS ARE NOT TO BE SCALED. DRAWINGS ARE NOT FOR CONSTRUCTION UNLESS SIGNED BY THE ARCHITECT.

CONSULTANTS

N
W E
S

REBUILD HOUSE SECTION AND REMODELING AT

1022 PEDDIE STREET
HOUSTON, TX. 77009

MARK	DATE	DESCRIPTION

PROJECT NO: #	SCALE: 1'–0"=⅛"
CAD DWG FILE:	1022 PEDDIE STREET R3.DWG
DRAWN BY: ISAAC	
CHK'D BY: ####	DATE: 10.20.2016
COPYRIGHT:	

SHEET TITLE

SITE PLAN

A0.1

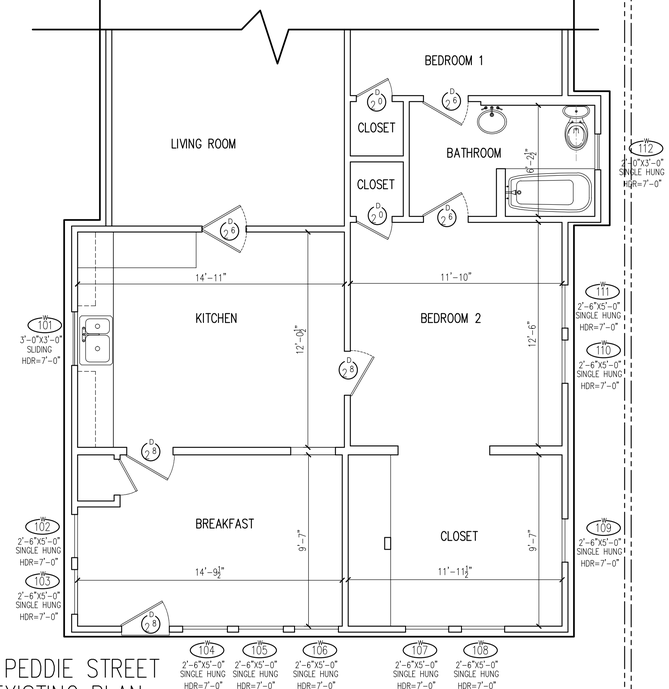

1022 PEDDIE STREET
EXISTING PLAN

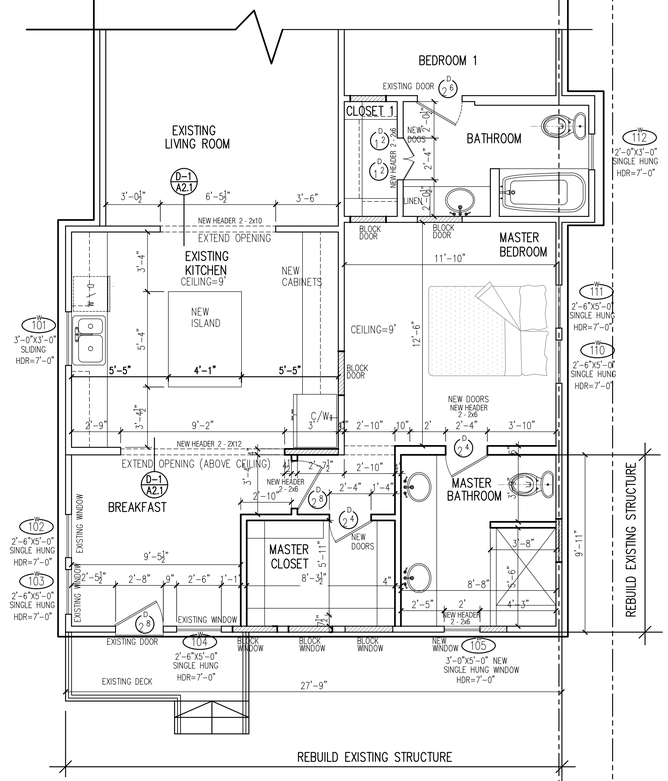

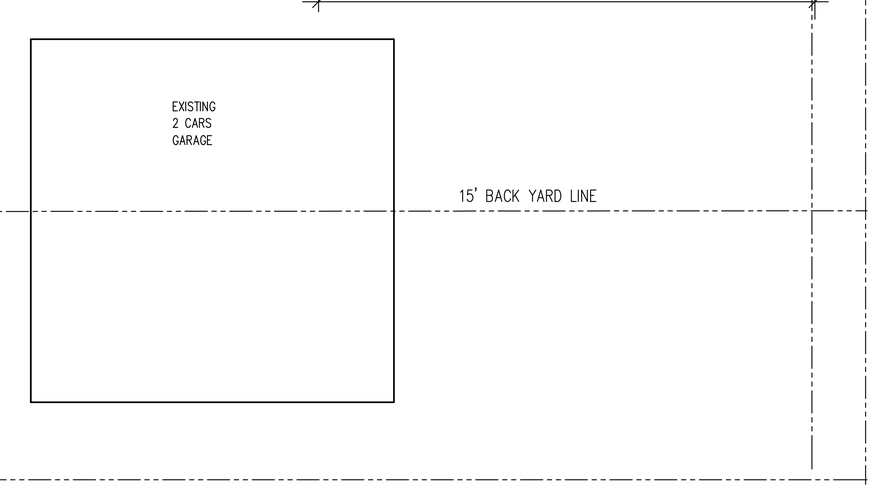

1022 PEDDIE STREET
PROPOSED PLAN

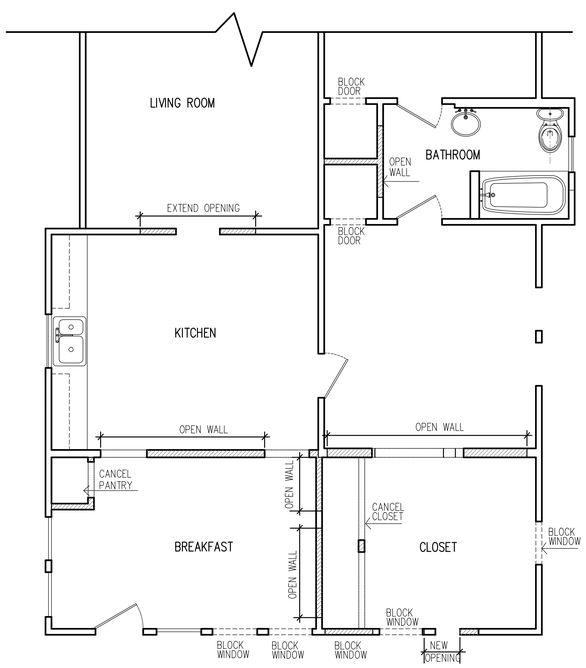

1022 PEDDIE STREET DEMO. PLAN

GENERAL NOTES / REFER TO IRC 2012

1. DO NOT SCALE DRAWINGS, WRITTEN DIMENSIONS TAKE PRECEDENCE. CONTRACTOR TO VERIFY AND BE RESPONSIBLE FOR ALL DIMENSIONS AND CONDITIONS ON THE JOB.
2. ALL WRITTEN NOTES ON THESE DRAWINGS SHALL TAKE PRECEDENCE OVER THE MINIMUM STANDARD NOTES DETAILED ON THE LAST SHEET OF THESE DRAWING.
3. BUILDER TO APPROVE LOCATION OF HOUSE ON LOT, AND TO VERIFY ALL UTILITY LOCATIONS, ALL EASEMENTS, BUILDING AND SETBACK LINES, AND TO OBSERVE ALL DEED RESTRICTIONS PRIOR TO CONSTRUCTION.
4. ALL BEDROOM WINDOW SILLS TO BE A MAXIMUM OF 44" ABOVE FINISHED FLOOR MINIMUM OPENINGS ARE 24" HIGH, 20" WIDE AND MINIMUM OF 5.7 SQ. FT. OF NET CLEAR.
5. ALL PRE-FAB FIREPLACES TO BE BUILT AND INSTALLED PER 2012 IRC BCT 3102 AND BE UL AND I.C.B.O. APPROVED
   A COPY OF THE MANUFACTURE INSTALLATION MANUAL WILL BE AVAILABLE N SITE FOR INSPECTOR REVIEW.
6. STAIRWAYS SHALL COMPLY WITH 2012 IRC MINIMUM WIDTH BETWEEN HANDRAILS SHALL BE 30".
7. HANDRAILS TO BE 34 TO 38" ABOVE NOSING OF TREADS.
8. GUARDRAILS TO BE 42" ABOVE FINISHED FLOOR WITH BALUSTERS AT 4" O.C. MAX. NEWEL POST SHALL NOT BE LOCATED ABOVE FIRST TREAD.
9. HANDGRIPPING PORTION OF HANDRAIL SHALL NOT BE LESS THAN 1 1/4" NOR MORE THAN 2" IN CROSS SECTION.
10. PROVIDE UNDERSIDE OF ALL STAIRWELLS WITH 5/8" TYPE "X" FIRE RATED GYPSUM WHEN UNDERSIDE CAN BE CLOSED OFF.
11. SMOKE DETECTORS REQUIRE 100 VOLT CONNECTION TO HOUSE WIRING WITH BATTERY BACKUP.
12. ALL FLOOR DRAINS TO HAVE OVERFLOW PAN WITH RELIEF LINE TO OUTSIDE OR STORM SEWER (NOT SANITARY SEWER LINE).
13. PROVIDE PLUMBING ACCESS PANEL AT ALL TUBS BY PLUMBING CODE 82 (83, 84 REV) SECTIONS 9052, 9053.
14. ALL GLASS AT TUBS AND SHOWERS SHALL BE TEMPERED SAFETY GLASS.
15. PROVIDE VENTILATION AT ALL BATHS AND UTILITY ROOMS THROUGH NATURAL OR MECHANICAL MEANS.
16. ATTIC ACCESS IS PROVIDED ON PLANS TO SERVICE MECHANICAL EQUIPMENT AND LIMITED LIGHT STORAGE BUT IN NO CASE SHALL THE COMBINED DECKED ATTIC AREAS EXCEED 500 SQ. FT.
17. LOCATE WATER HEATER(S) IN ATTIC ABOVE LOAD-BEARING PARTITION IN A PAN, WITH RELIEF DRAIN LINE TO OUTSIDE OR STORM SEWER LINE.
18. CHIMNEYS TO BE MINIMUM 24" ABOVE ANY ROOF LINE.

FRAMING SPAN TABLES

SELECTED VALUES IBC 2012, SECTION 2308 SOUTHERN PINE SPANS SHOWN

COMPONENT	SIZE	#2 GRADE S.Y.P. 19% M.C.		#3 GRADE S.Y.P. 19% M.C.		
		12"O.C.	16"O.C.	24"O.C.	12"O.C.	16"O.C.	24"O.C.
FLOOR JOIST SPAN DEAD LOAD = 10 PSF. LIVE LOAD = 40 PSF. IBC 2012, TABLE 2308.8(2)	2X6 2X8 2X10 2X12	10'-9" 14'-2" 18'-0" 21'-9"	9'-9" 12'-10" 16'-1" 18'-10"	8'-9" 11'-10" 13'-1" 15'-5"	9'-4" 11'-11" 14'-0" 16'-8"	8'-1" 10'-3" 12'-2" 14'-6"	6'-7" 8'-5" 9'-11" 11'-10
CEILING JOIST SPAN LL=10 PSF, DL=5 PSF NO LIMITED STORAGE IBC 2012, TABLE 2308.10.2(1)	2X6 2X8 2X10	19'-6" 25'-8" –	17'-8" 23'-4" –	15'-6" 20'-1" 23'-1"	17'-0" 21'-8" 25'-7"	14'-9" 18'-9" 22'-2"	12'-0" 15'-4" 18'-1"
RAFTER SPAN LL=20 PSF. DL=10 PSF L/R=180 (COMPOSITION) IBC 2012, TABLE 2308.10.3(1)	2X6 2X8 2X10	17'-0" 22'-5" –	15'-1" 19'-5" 23'-2"	12'-3" 15'-10" 18'-11"	13'-6" 17'-2" 20'-3"	11'-8" 14'-10" 17'-6"	9'-6" 12'-1" 14'-4"
RAFTER SPAN LL=20 PSF, DL=10 PSF L/R=240 (TILE ROOF) IBC 2012, TABLE 2308.10.3(2)	2X6 2X8 2X10	15'-6" 20'-5" –	14'-1" 18'-6" 23'-2"	12'-3" 15'-10" 18'-11"	13'-6" 17'-2" 20'-3"	11'-8" 14'-10" 17'-6"	9'-6" 12'-1" 14'-4"
HEADER SPAN ROOF AND CEILING LOAD MAXIMUM ROOM WIDTH=20'-0" IBC 2012, TABLE 2308.95	HEADER SIZE	2-2x6		2-2x8	2-2x10		2-2x12
	MAXIMUM SPAN	5'-5"		6'-10"	8'-5"		9'-9"

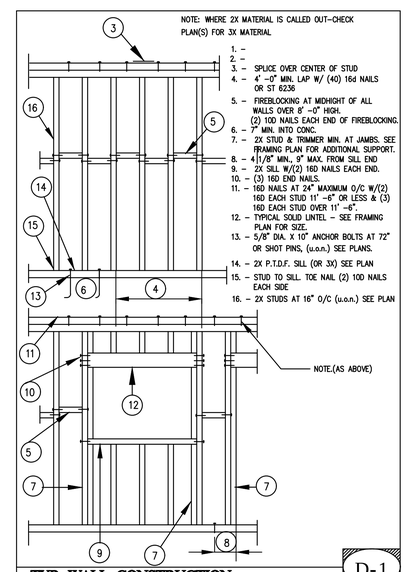

TYP. WALL CONSTRUCTION

ILA

I.L.A. Interior & Exterior Planning
Design & Consulting
Tel.: (818) 451-6681

DESIGN & CONSTRUCTION
50 BRIAR HOLLOW LANE, SUITE #210 EAST
HOUSTON TX, 77027
isaacarchitect@gmail.com

THE CONTRACTOR IS TO VERIFY ALL DIMENSIONS ON SITE BEFORE BUILDING AND REPORT ANY ERROR, OMISSIONS, OR DISCREPANCIES TO THE ARCHITECT. DRAWINGS ARE INSTRUMENTS OF SERVICE AND REMAIN THE PROPERTY OF THE ARCHITECT. COPYRIGHT OF THE DRAWINGS AND THE WORK EXECUTED THEREFORE ARE RESERVED BY THE ARCHITECT. DRAWINGS ARE NOT TO BE SCALED. DRAWINGS ARE NOT FOR CONSTRUCTION UNLESS SIGNED BY THE ARCHITECT.

CONSULTANTS

N W E S

MARK	DATE	DESCRIPTION

PROJECT NO: #	SCALE: 1'-0"=¼"
CAD DWG FILE:	1022 PEDDIE STREET R3.DWG
DRAWN BY: ISAAC	
CHK'D BY: ####	DATE: 10.20.2016
COPYRIGHT:	

SHEET TITLE

HOUSE REMODELING AT

1022 PEDDIE STREET HOUSTON, TX. 77009

FLOOR PLAN

A2.1

ELEVATION NOTES:
ALL DRAWING HERE REFERENCES THE 2012 INTERNATIONAL RESIDENTIAL CODE (W/ AMENDMENTS) AND THE 2012 INTERNATIONAL BUILDING CODE (W/ AMENDMENTS).

DO NOT SCALE DRAWINGS. WRITTEN DIMENSIONS TAKE PRECEDENCE. CONTRACTOR TO VERIFY ABD BE RESPONSIBLE ALL DIMENSIONS AND CONDITIONS.
ALL WRITTEN NOTES ON THESE DRAWINGS SHALL TAKE PRECEDENCE OVER THE MINIMUM STANDARD NOTES DETAILED ON THE LAST SHEET OF THIS DOCUMENT.
ALL BEDROOM WINDOW SILLS TO BE A MAXIMUM OF 44" ABOVE FINISHED FLOOR. MINIMUM OPENINGS ARE 24" HIGH, 20" WIDE AND MIN. 5.7 SQ.FT. NET CLEAR OPENING.
ALL WINDOW HEAD HEIGHTS TAKEN FROM IMMEDIATE INTERIOR FLOOR LEVEL. HEAD HEIGHTS IN STAIRWELLS TAKEN FROM FIRST FLOOR LEVEL (AT THE STAIRWELL).
OPENINGS O A I HOUR FIRE RATED EXTERIOR WALL SHALL BE PROTECTED WITH AN ASSEMBLY HAVING A FIRE-PROTECTION RATING OF NOT LESS THAN HOUR. SEE IBC 2012, SECT'S. 714.3.7 AND 714.3.9 AND TABLE 714.2 (EXTERIOR WALLS).
PENETRATIONS INTO OR THROUGH FIRE-RATED WALLS SHALL CONFIRM WITH IBC 2012. SECT.7113. BUILDER TO DETERMINE FINAL MATERIAL AND PROVIDE APPROPRIATE TEST CRITERIA TO THE LOCAL AUTHORITY.
PROVIDE SAFETY GLAZING IN THESE HAZARDOUS LOCATIONS (SECT. R308.4).
A. GLAZING IN TUBE AND SHOWERS WHERE THE BOTTOM EDGE OF A PANE IS LESS THAN 60" FROM ANY WALKING SURFACE.
B. GLAZING IN SIDE HINGED DOORS EXCEPT JALOUSIES.
C. GLASSING WITHIN 24" FROM A DOOR AND BOTTOM OF PANE IS LESS THAN 60" FROM THE FLOOR.
D.EXPOSED AREA OF AN INDIVIDUAL PANE GREATER THAN 9 SQ FT.
E. BOTTOM EDGE OF A PANE IS LESS THAN 18" FROM FLOOR/
F. TOP EDGE OF A PANE IS GREATER THAN 36" FROM FLOOR (WHEN BOTTOM OF THIS SAME PANE IS LOWER THAN 36" FROM THE FLOOR).
G. ONE OR MORE WALKING SURFACES WITHIN 36" HORIZONTALLY OF THE GLAZING.
H. GLAZING IN STAIRWELLS WHERE THE BOTTOM EDGE OF A PANE IS LESS THAN 60" VERTICALLY FROM ANY NOSING, AND 60" HORIZONTALLY FORM ANY STAIR NOSING, WHERE THE EDGE OF PANE IS LESS THAN 60" ABOVE THE FLOOR.

ALL RAILING (WOOD, METAL OR PRECAST) TO HAVE 4" MAXIMUM SPACING BETWEEN BALUSTERS (SPINDLES) AND TO CONFORM WITH IRC 2012 SECT. R316.
HANDRAILS AND GUARDRAILS SHALL BE DESIGNED FOR MINIMUM LIVE LOAD
A. INTERIOR GUARDS SHALL NOT BE CONSTRUCTED WITH HORIZONTAL RAILS OR OTHER ORNAMENTAL PATTERN THAT RESULTS IN A LADDER EFFECT (SECT.316.2).
B. EXTERIOR GUARDS TO HAVE RAILING NO LOWER THAN 42" FROM FINISHED FLOOR, WITH NO LESS THAN 36" DISTANCE FROM TOP OF GUARD TO BOTTOM OF LOWEST FUNNER MAXIMUM UNSUPPORTED SPAN OF LOWEST RUMMER SHALL BE 6"-0".
ROOF PLATE HEIGHTS TAKEN FROM NOMINAL (FIRST) FLOOR (SLAB) LEVEL. U.O.N.
ALL BRICK OR PREFAB FIREPLACES TO BE BUILT AND INSTALLED PER IRC 2012 CHAPTER 10, AND BE U.L. AND I.C.B.O. APPROVED ("). A COPY OF THE MANUFACTURE INSTALLATION MANUAL WILL BE AVAILABLE ON SITE FOR INSPECTOR REVIEW.
CHIMNEYS TO BE A MINIMUM 2"-0" ABOVE ANY ROOF LINE WITHIN A 10"0" RADIUS, OR 3"-0" FROM ANY ROOF LINE (RIDGE), SEE IRC 2012 SECT. R1001.6. CHIMNEY PIPE(S) SHALL EXIT THROUGH THE ROOF DECKING INSIDE ALL BUILDING AND SETBACK LINES.
PROVIDE SPARK ARRESTORS AT CHIMNEY. MESH TO HAVE MAXIMUM GAP OF 1/2", MINIMUM GAP OF 3/8" AND TO COMPLY WITH IRC 2012 CHAPTER 10.
ALL GAS APPLIANCE VENTS TO EXIT AN EXTERIOR WALL LOCATED NO LESS THAN 4"-0" FROM ANY PROPERTY LINE OR COMMON WALL. DISTANCE OF GAS VENT PIPES THROUGH A EXTERIOR WALL PERPENDICULAR TO A PROPERTY LINE OR COMMON WALL TO BE MINIMUM OF 4"-0" FROM THE PROPERTY LINE OR COMMON WALL.

1. 1/2" CDX PLYWOOD DECKING OR EQUAL.
2. CONTINUOUS 'HARDIE' VENTED SOFFIT AND RIDGE VENTS BE USED.
3. FULL GUTTERING WITH DOUNSPOUTS TO PROPERTY DRAINAGE.

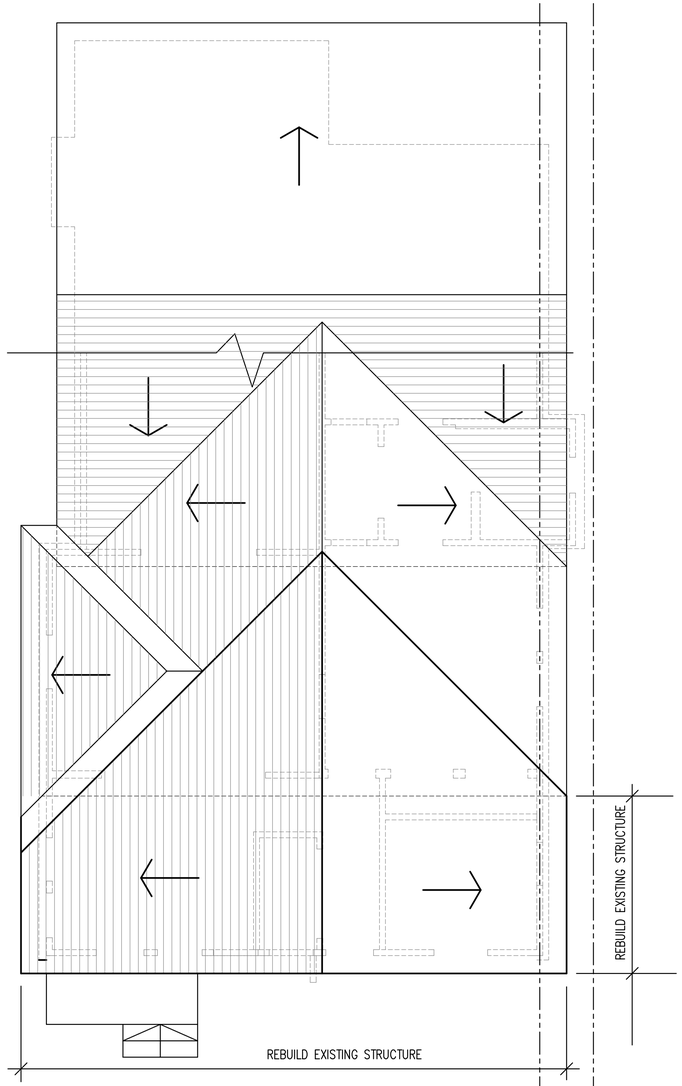

1022 PEDDIE STREET ROOF PLAN

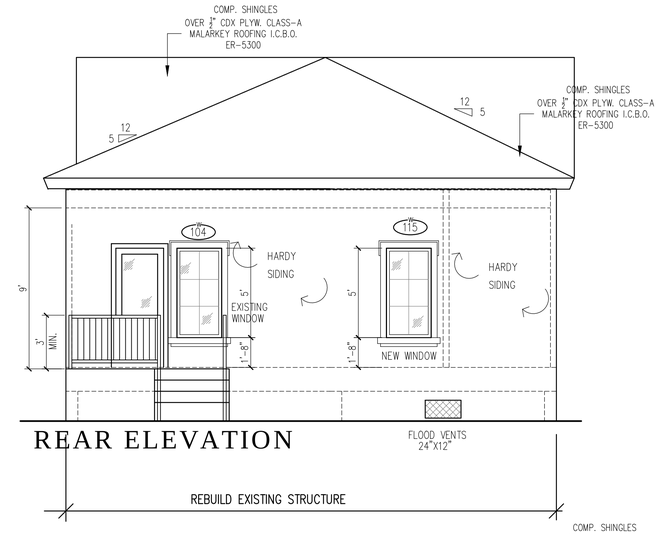

REAR ELEVATION

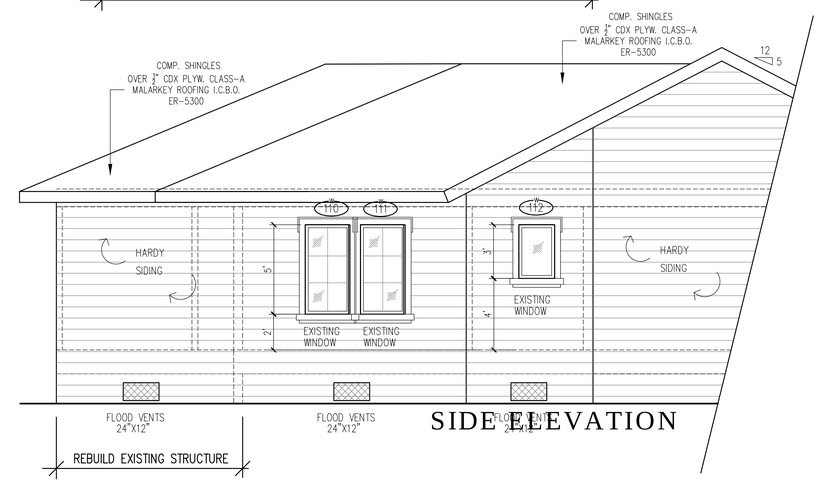

SIDE ELEVATION

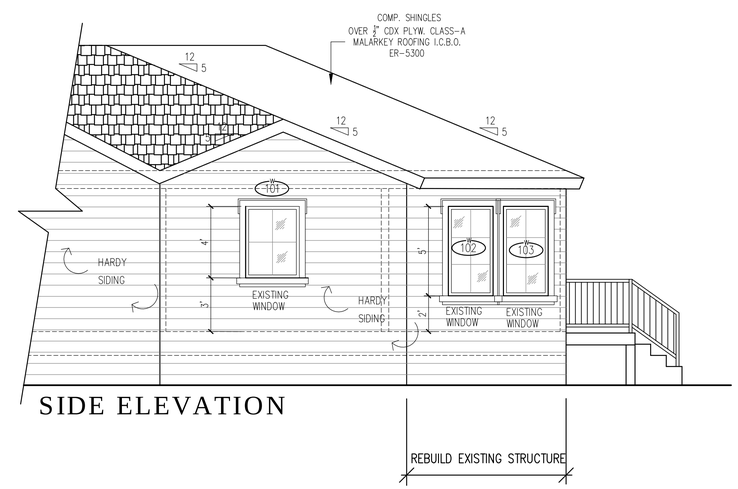

SIDE ELEVATION

ILA

I.L.A. Interior & Exterior Planning
Design & Consulting
Tel.: (818) 451-6681

DESIGN & CONSTRUCTION
50 BRIAR HOLLOW LANE, SUITE #210 EAST
HOUSTON TX, 77027
isaacarchitect@gmail.com

THE CONTRACTOR IS TO VERIFY ALL DIMENSIONS ON SITE BEFORE BUILDING AND REPORT ANY ERROR, OMISSIONS, OR DISCREPANCIES TO THE ARCHITECT. DRAWINGS ARE INSTRUMENTS OF SERVICE AND REMAIN THE PROPERTY OF THE ARCHITECT. COPYRIGHT OF THE DRAWINGS AND THE WORK EXECUTED THEREFORE ARE RESERVED BY THE ARCHITECT. DRAWINGS ARE NOT TO BE SCALED. DRAWINGS ARE NOT FOR CONSTRUCTION UNLESS SIGNED BY THE ARCHITECT.

CONSULTANTS

HOUSE ADDITION AND REMODELING AT

1022 PEDDIE STREET
HOUSTON, TX. 77009

MARK	DATE	DESCRIPTION

PROJECT NO: #	SCALE: 1"-0"=¼"
CAD DWG FILE:	1022 PEDDIE STREET R3.DWG
DRAWN BY: ISAAC	
CHK'D BY: ###	DATE: 10.20.2016
COPYRIGHT:	

SHEET TITLE

ROOF PLAN
ELEVATIONS

A2.2

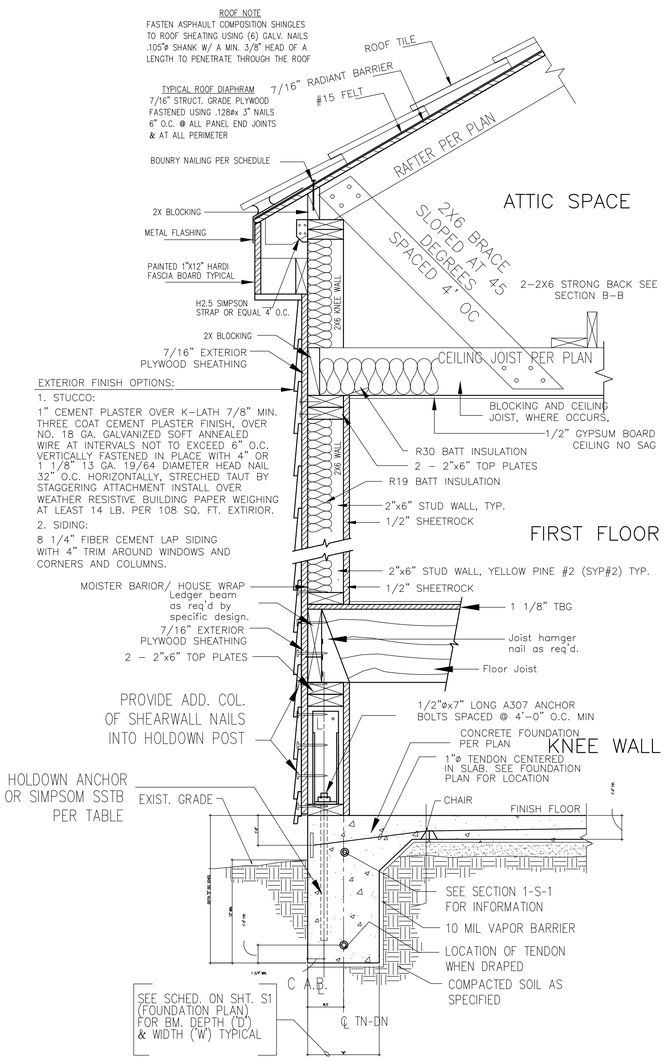

TYPICAL WALL SECTION (NO FIRE WALL)

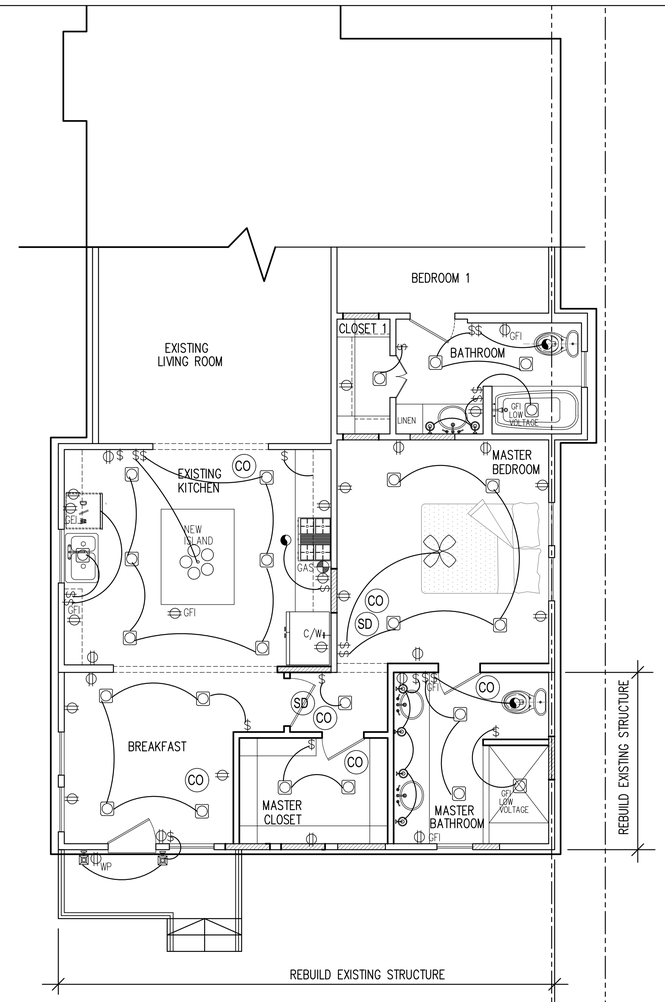

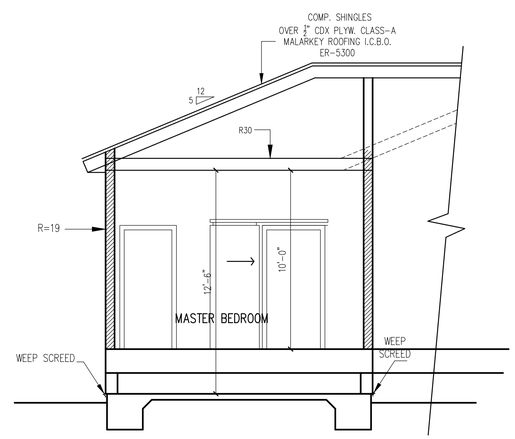

SECTION 1

ELECT. SYMBOL SCHEDULE

- 110V OUTLET
- 220V OUTLET
- CAT. 5 INTERNET
- TELEPHONE
- SD — SMOKE DETECTOR HARD-WIRED W/ BATTERY BACK-UP
- CO — C.O. DETECTORS HARD-WIRED W/ BATTERY BACK-UP
- RECESSED LIGHT
- P — 110V PENDANT LIGHT FIXTURE
- FLOOD LIGHT
- CEILING FAN
- EXHAUST FAN
- 110V CHANDELIER LIGHT FIXTURE
- 110V WALL LIGHT FIXTURE
- 110V OUTDOOR WALL LIGHT FIXTURE
- WP — 110V DUPLEX RECEPTACLE W/ WEATHERPROOF COVER
- GFI — 110V DUPLEX RECEPTACLE GROUND FAULT INTERRUPTED
- 220V RECEPTACLE

ELECTRICAL NOTES:

a) NEPA 70 NEC 2011 Texas adopted and City Of HOUSTON ORDINANCE.
"VERIFY AT INSPECTION"

b) RECEPTACLES PER ARTICLE 210.52. (VERIFY BY INSPECTION)
1. Receptacles shall be installed so that no point along the floor line in any wall space is more than 6 ft. from an outlet, including any wall space 2 ft. wide or greater.
2. In kitchens and dining rooms, counter space receptacles shall be installed:
   - At each wall counter space that is 12 in. or greater;
   - No more than 48 in. oc.;
   - On island counter spaces (one receptacle min.);
   - On peninsular counter spaces (one receptacle min.);
   - Not more than 18 in. above the counter top.
3. In bathrooms, at least one wall receptacle shall be within 36 in. of each basin .
4. In laundry rooms, at least one receptacle shall be provided.
5. In garages, at least one receptacle shall be provided.
6- In hallways of 10 ft. or more in length, at least one receptacle shall be provided.

c)

d) GROUND-FAULT CIRCUIT INTERRUPTERS. PER ARTICLE 210.12(B)
(VERIFY BY INSPECTION)
Ground-Fault Circuit-Interrupter protection shall be installed in:
- Bathrooms and shower area
- Garages and accessory buildings
- At all exterior locations
- In crawl spaces
- Kitchen
- Within 6 ft. of wet bar sinks.

e) ENERGY
1. All general lighting in kitchens shall be fluorescent (40 lumens per watt).
   Lighting shall:
   - Provide a uniform pattern of lighting, and a light level sufficient for performing basic kitchen tasks;
   - Be controlled on a readily accessible switch at an entrance to the kitchen;
   - Not contain medium-base incandescent lamp sockets.
2. All bathrooms containing a shower or bathtub shall have fluorescent lighting (40 lumens per watt).

f) LIGHTING
Switched lighting shall be installed:
- In all habitable rooms and in bathrooms;
- In hallways and stairways;
- In garages;
- At all outdoor entrances and exits.

g) FANS
In bathrooms containing tubs and showers;
1- A fan capable of providing 5 air changes per hour shall be installed when exterior openings for natural ventilation are provided;
2- A fan capable of providing 7.5 air changes per hour shall be installed when no exterior openings for natural ventilation are provided.

H) open incandescent luminaries shall not be install in closets. (Article 410.16(B)

SMOKE DETECTORS:
smoke detectors shall be hard-wired and inter-connected with battery backup.

C.O. DETECTORS:
INSTALL carbon monoxide detectors shall be hard-wired and inter-connected with battery backup.

NOTES:

1. ARC FAULT PROTECTION IS REQUIRED THROUGHOUT

ILA

I.L.A. Interior & Exterior Planning
Design & Consulting
Tel.: (818) 451-6681

DESIGN & CONSTRUCTION
50 BRIAR HOLLOW LANE, SUITE #210 EAST
HOUSTON TX, 77027
isaacarchitect@gmail.com

THE CONTRACTOR IS TO VERIFY ALL DIMENSIONS ON SITE BEFORE BUILDING AND REPORT ANY ERROR, OMISSIONS, OR DISCREPANCIES TO THE ARCHITECT. DRAWINGS ARE INSTRUMENTS OF SERVICE AND REMAIN THE PROPERTY OF THE ARCHITECT. COPYRIGHT OF THE DRAWINGS AND THE WORK EXECUTED THEREFORE ARE RESERVED BY THE ARCHITECT. DRAWINGS ARE NOT TO BE SCALED. DRAWINGS ARE NOT FOR CONSTRUCTION UNLESS SIGNED BY THE ARCHITECT.

CONSULTANTS

HOUSE ADDITION AND REMODELING AT

1022 PEDDIE STREET HOUSTON, TX. 77009

MARK	DATE	DESCRIPTION

PROJECT NO: #	SCALE:	1'-0"=¼"
CAD DWG FILE:	1022 PEDDIE STREET R3.DWG	
DRAWN BY: ISAAC		
CHK'D BY: ####	DATE:	10.20.2016
COPYRIGHT:		

SHEET TITLE

SECTION
ELECTRICAL PLAN

A2.3

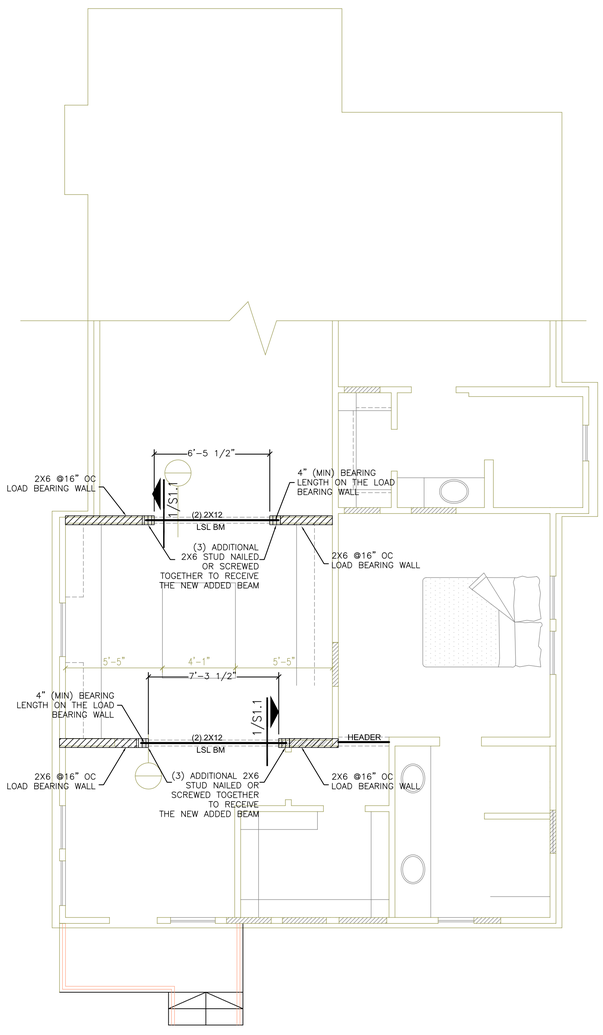

DEMOLISHITION FRAMING PLAN

SCALE: 1/4"=1'-0"

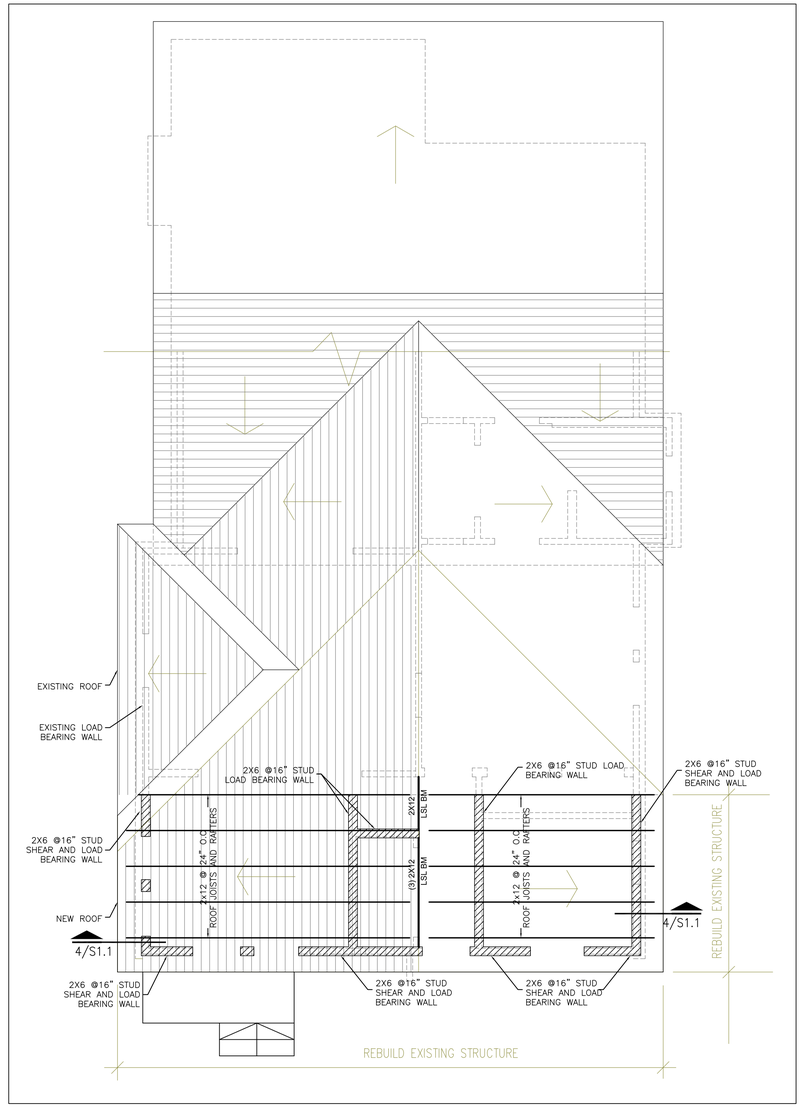

ROOF FRAMING PLAN

SCALE: 1/4"=1'-0"

DESIGN CRITERIA USED FOR THE REMODELED PART OF THE HOUSE:
L.L (ROOF) = 20PSF
ULTIMATE WIND SPEED = 140 MPH @ 3 SECOND GUST, EXPOSURE B

NOTE:
1- SHEATH ALL LOAD BEARING STUD WALLS PRIOR TO LOADING OF ROOF BEAMS, JOISTS AND ROOF DECK.

2- LUMBER STUDS AND BEAMS TO BE SOUTHERN PINE OR DOUGLAS FIR GRADE NO.2.

3- SEE DETAILS 7&8/S1.1 FOR SHEAR WALL DETAILS.

SHEAR WALL SCHEDULE

ALLOWABLE LOAD	DESCRIPTION	NO. OF SIDES	SILL BOLTING	SHEAR TRANSFER
300 plf	5/8" (Min) APA PLYWOOD RATED SHEATHING WITH ALL JOINTS BLOCKED. SCREW WITH NO. 8–18x1" (0.292" MIN HEAD DIA) BUGLE HEAD SCREW @ 4" OC PERIMETER AND 12" OC INTERIOR	ONE	HILTI X–DNI POWDER DRIVEN FASTENERS – :145" DIA. x 1 3/4" EMBED @ 6" O.C. SPACING	L70 @ 12" O.C. USE 8–#10 SCREWS

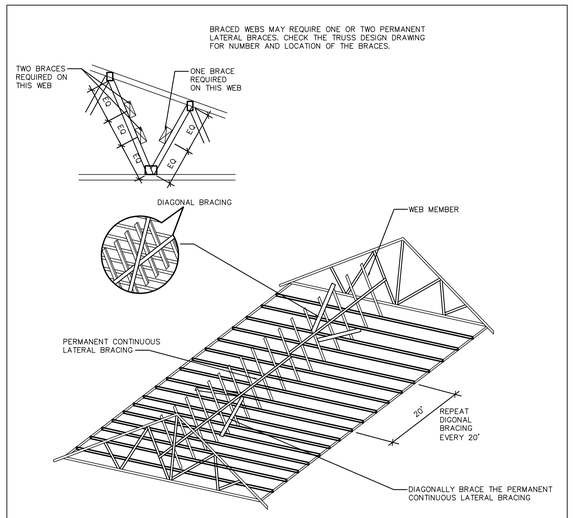

1 WEB MEMBER PERMANENT BRACING DETAIL
NTS

GENERAL NOTES:
1. PLAN IS LIMITED ONLY TO THE REPAIRED PART OF THE HOUSE AS SHOWN AND IT DID NOT DETERMINE THE EXISTING HOUSE FRAMING DUE TO THE LIMITED INFORMATION PROVIDED AT THE TIME OF THE DRAWING. OWNER DID NOT PROVIDE THE EXISTING HOUSE DRAWINGS.
2. IT HAS BEEN ASSUMED THAT ALL EXISTING HOUSE FRAMING AND FOUNDATION HAS BEEN DESIGNED AND CONSTRUCTED PER THE RELEVANT NATIONAL/ LOCAL CODES AND SOUND ENGINEERING PRACTICE.
3. IT HAS BEEN ASSUMED THAT THE EXISTING HOUSE FRAMING AND FOUNDATION ARE IN A GOOD CONDITION, WITHOUT ANY DAMAGE.
4. STUDS FOR ALL SHEAR AND LOAD BEARING WALLS SHALL BE 2X6 @ 16" O.C. MIN.
5. IT HAS BEEN ASSUMED THAT THERE IS A STEM FOUNDATION BELOW EACH BEARING WALL.
6. IT IS THE CONTRACTOR RESPONSIBILITY TO INSPECT AND VERIFY DIMENSIONS, CONDITIONS FOR ALL EXISTING RELEVANT WALLS, FRAMES. IF THE CONSTRUCTION CONTRACTOR NOTICED ANY DISCREPANCIES OR ISSUES, SHOULD CONTACT THE ENGINEER IMMEDIATELY AND PRIOR TO THE CONSTRUCTION.
7. REMODELED PART OF THE HOUSE HAS BEEN CHECKED FOR ULTIMATE WIND SPEED OF 140MPH @ 3 SECOND GUST, EXPOSURE B, PER IBC–2012. HOWEVER THE REST OF THE EXISTING HOUSE HAS NOT BEEN DETERMINED AT THIS TIME.
8. CONTRACTOR SHALL SHORE THE STRUCTURE FRAME OF THE HOUSE ABOVE THE PROPOSED DEMOLISHED WALLS PRIOR TO DEMOLISHING IT.
9. EXISTING DAMAGED STUDS, PLYWOOD SHALL BE REPLACED WITH NEW STUDS AND PLYWOOD.
10. TYP FOR ALL LOAD BEARING AND/ OR SHEAR WALLS, IT IS NOT ALLOWED FOR ANY PENETRATION OVER 2" DIAMETER IN THE STUDS.

N

ASI CONSTRUCTION & CONSULTING, LLC
TBPE FIRM REGISTERATION #F-14181
2904 LAUREL BROOK LN.
PEARLAND, TEXAS 77584
PH. 832–693–8905

PROJECT
HOUSE REMODELING @
1022 PEDDIE STREET
HOUSTON, TX 77009

STATE OF TEXAS
SAM F. IBRAHIM
109983
LICENSED
PROFESSIONAL ENGINEER
10/31/2016

REVISIONS

NO.	DESCRIPTION	DATE

DATE OF ISSUE: 10/22/2016

DRAWN BY: SI | CHECKED: SI

PROJECT No:
SI–16–106

DEMOLITION AND ROOF FRAMING PLAN

SHEET No: **S1.0**

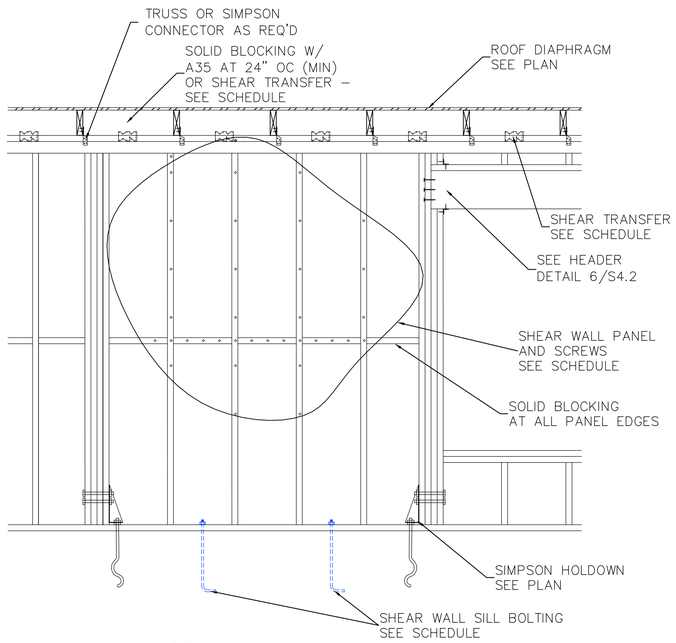

8 SHEARWALL ELEVATION
SCALE: 3/4" = 1'-0"

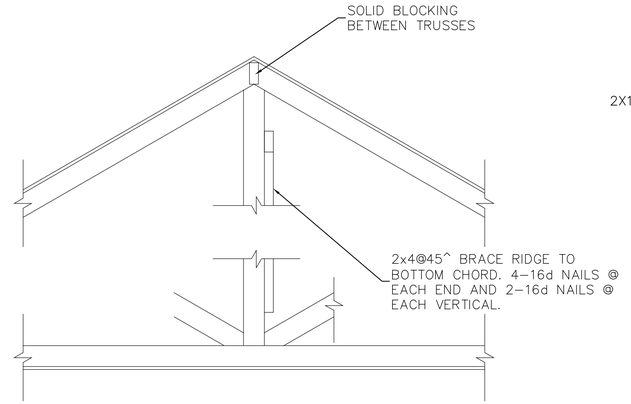

6 RIDGE BRACE DETAIL
SCALE: 3/4" = 1'-0"

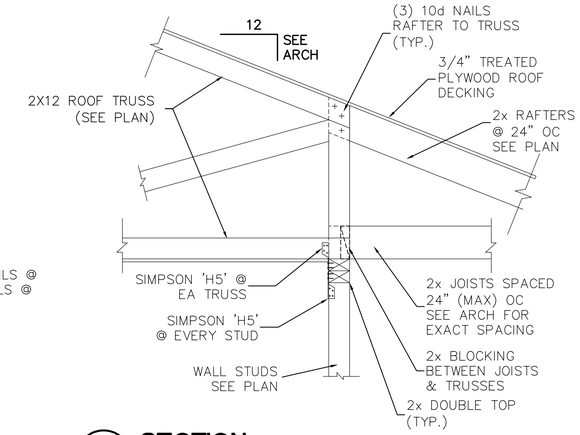

3 SECTION
SCALE: 3/4" = 1'-0"

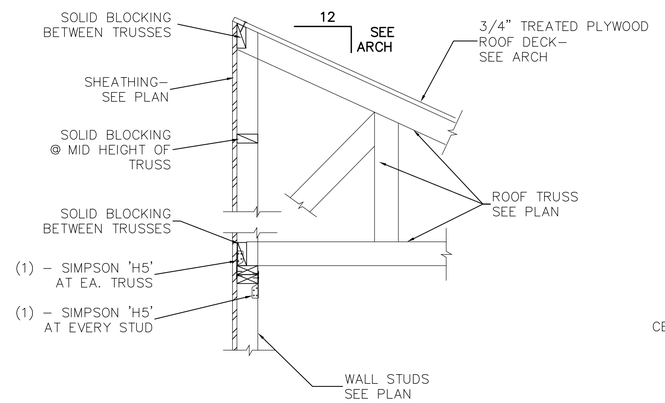

5 TYPICAL EDGE DETAIL
SCALE: 3/4" = 1'-0"

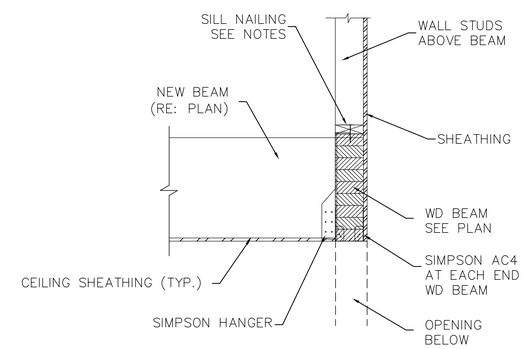

2 DETAIL AT OPENING
SCALE: N.T.S

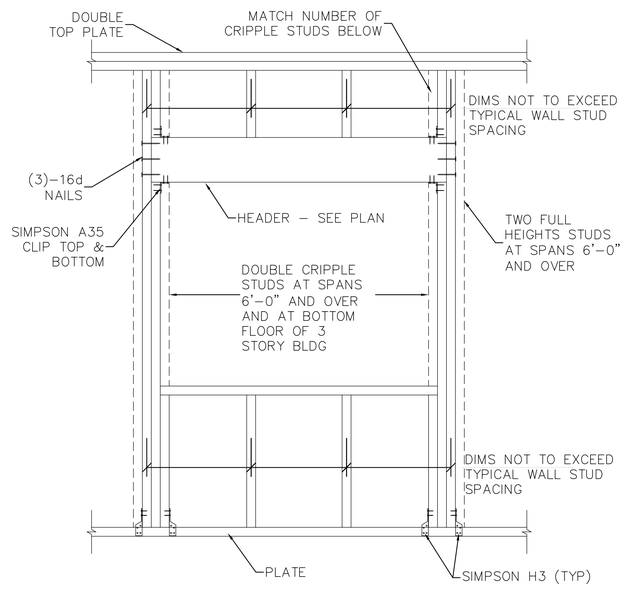

7 HEADER DETAIL
SCALE: N.T.S.

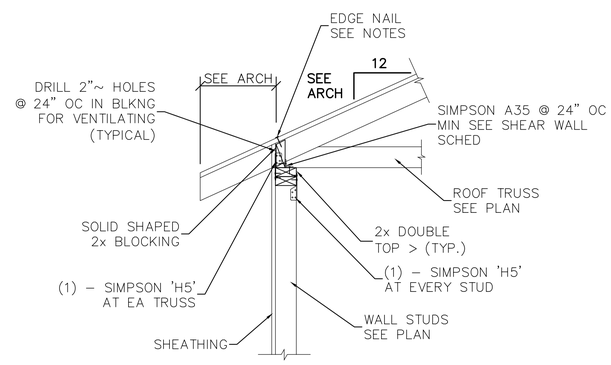

4 TYPICAL EDGE DETAIL
SCALE: 3/4" = 1'-0"

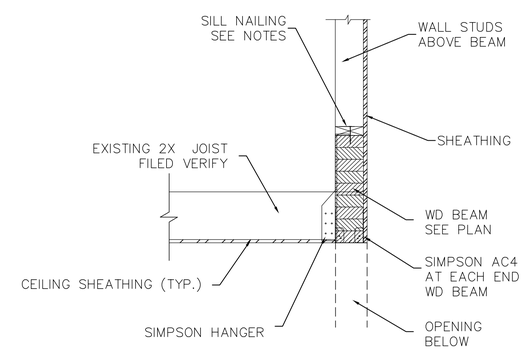

1 DETAIL AT OPENING
SCALE: N.T.S

ASI CONSTRUCTION & CONSULTING, LLC
TBPE FIRM REGISTERATION #F-14181
2904 LAUREL BROOK LN.
PEARLAND, TEXAS 77584
PH. 832-693-8905

PROJECT
HOUSE REMODELING
@
1022 PEDDIE STREET
HOUSTON, TX 77009

STATE OF TEXAS
SAM F. IBRAHIM
109983
LICENSED PROFESSIONAL ENGINEER
10/31/2016

REVISIONS

NO.	DESCRIPTION	DATE

DATE OF ISSUE: 10/22/2016

DRAWN BY: SI | CHECKED: SI

PROJECT No:
SI-16-106 05/19/2016

FRAMING DETAILS AND NOTES

SHEET No: **S1.1**